SUPERO® PDSMU

USER'S MANUAL

Revision 1.0a

The information in this User's Manual has been carefully reviewed and is believed to be accurate. The vendor assumes no responsibility for any inaccuracies that may be contained in this document, makes no commitment to update or to keep current the information in this manual, or to notify any person or organization of the updates. **Please Note: For the most up-to-date version of this manual, please see our web site at www.supermicro.com.**

SUPER MICRO COMPUTER reserves the right to make changes to the product described in this manual at any time and without notice. This product, including software, if any, and documentation may not, in whole or in part, be copied, photocopied, reproduced, translated or reduced to any medium or machine without prior written consent.

IN NO EVENT WILL SUPER MICRO COMPUTER BE LIABLE FOR DIRECT, INDIRECT, SPECIAL, INCIDENTAL, SPECULATIVE OR CONSEQUENTIAL DAMAGES ARISING FROM THE USE OR INABILITY TO USE THIS PRODUCT OR DOCUMENTATION, EVEN IF ADVISED OF THE POSSIBILITY OF SUCH DAMAGES. IN PARTICULAR, SUPER MICRO COMPUTER SHALL NOT HAVE LIABILITY FOR ANY HARDWARE, SOFTWARE, OR DATA STORED OR USED WITH THE PRODUCT, INCLUDING THE COSTS OF REPAIRING, REPLACING, INTEGRATING, INSTALLING OR RECOVERING SUCH HARDWARE, SOFTWARE, OR DATA.

Any disputes arising between manufacturer and customer shall be governed by the laws of Santa Clara County in the State of California, USA. The State of California, County of Santa Clara shall be the exclusive venue for the resolution of any such disputes. Super Micro's total liability for all claims will not exceed the price paid for the hardware product.

FCC Statement: This equipment has been tested and found to comply with the limits for a Class A digital device pursuant to Part 15 of the FCC Rules. These limits are designed to provide reasonable protection against harmful interference when the equipment is operated in a commercial environment. This equipment generates, uses, and can radiate radio frequency energy and, if not installed and used in accordance with the manufacturer's instruction manual, may cause harmful interference with radio communications. Operation of this equipment in a residential area is likely to cause harmful interference, in which case you will be required to correct the interference at your own expense.

California Best Management Practices Regulations for Perchlorate Materials: This Perchlorate warning applies only to products containing CR (Manganese Dioxide) Lithium coin cells. "Perchlorate Material-special handling may apply. See www.dtsc.ca.gov/hazardouswaste/perchlorate"

WARNING: Handling of lead solder materials used in this product may expose you to lead, a chemical known to the State of California to cause birth defects and other reproductive harm.

Manual Revision 1.0a

Release Date: Sept. 6, 2007

Unless you request and receive written permission from SUPER MICRO COMPUTER, you may not copy any part of this document.

Information in this document is subject to change without notice. Other products and companies referred to herein are trademarks or registered trademarks of their respective companies or mark holders.

Copyright © 2007 by SUPER MICRO COMPUTER INC.
All rights reserved.
Printed in the United States of America

Preface

About This Manual

This manual is written for system integrators, PC technicians and knowledgeable PC users. It provides information for the installation and use of the SUPERO® PDSMU motherboard. The PDSMU supports a single Intel Quad-Core QX6700/Xeon 3000 Series/Pentium D (Dual-Core)/Pentium 4 Extreme Edition/Pentium 4/Celeron D LGA (Land Grid Array) 775 Processor at a system bus speed of 1066 MHz, 800 MHz or 533 MHz. The LGA 775 Processor is housed in a Flip-Chip Land Grid Array package that interfaces with the motherboard via an LGA775 socket. The PDSMU supports the Intel Hyper-Threading (HT) Technology, the EM64T Technology, the Enhanced Intel SpeedStep Technology (EIST) and the Matrix Storage Technology. Please refer to the motherboard specifications pages on our web site (http://www.supermicro.com/Product) for updates or visit Intel's web site for processor support. This product is intended to be professionally installed.

Manual Organization

Chapter 1 describes the features, specifications and performance of the PDSMU mainboard and provides detailed information about the chipset.

Chapter 2 provides hardware installation instructions. Read this chapter when installing the processor, memory modules and other hardware components into the system. If you encounter any problems, see **Chapter 3**, which describes troubleshooting procedures for the video, the memory and the system setup.

Chapter 4 includes an introduction to BIOS and provides detailed information on running the CMOS Setup utility.

Appendix A and **Appendix B** provide BIOS POST Messages and POST Codes

Appendix C, Appendix D and **Appendix E** list HostRAID Setup Guidelines and Other Software Driver and Program Installation Instructions.

Conventions Used in the Manual

Special attention should be given to the following symbols for proper installation and to prevent damage done to the components or injury to yourself:

STOP **Danger/Caution:** Instructions to be strictly followed to prevent catastrophic system failure or to avoid bodily injury.

Warning: Important information given to ensure proper system installation or to prevent damage to the components.

***Note:** Additional Information given to differentiate various models or to give instructions on proper installation and use of components.

Table of Contents

Preface

About This Manual iii
Manual Organization iii
Conventions Used in the Manual iii

Chapter 1: Introduction

1-1 Overview 1-1
Checklist 1-1
Contacting Supermicro 1-2
SUPERO PDSMU Image 1-3
SUPERO PDSMU Layout 1-4
SUPERO PDSMU Quick Reference 1-5
Motherboard Features 1-6
System Block Diagram 1-8
1-2 Chipset Overview 1-9
1-3 Special Features 1-10
1-4 PC Health Monitoring 1-10
1-5 Power Configuration Settings 1-11
1-6 ACPI Features 1-12
1-7 Power Supply 1-12

Chapter 2: Installation

2-1 Static-Sensitive Devices 2-1
2-2 Processor and Heatsink Installation 2-2
2-3 Mounting the Motherboard in the Chassis 2-5
2-4 Installing DDR2 Memory 2-6
2-5 Control Panel Connectors/IO Ports 2-8
A. Backplane Connectors/IO Ports 2-8
B. Front Control Panel 2-8
C. Front Control Panel Pin Definitions 2-9
NMI Button 2-9
PWR LED 2-9
HDD LED/FP UID Switch 2-10
NIC1/NIC2 LED Indicators 2-10
OH/Fan Fail/PWR Fail/FP UID LED 2-11
Power Fail LED 2-11
Reset Button 2-12
PWR Button 2-12

2-6 Connecting Cables 2-13
ATX Power Connector 2-13
Processor Power Connector 2-13
Serial Ports 2-14
Chassis Intrusion 2-14
Universal Serial Bus (USB) 2-15
GLAN Ports 2-15
ATX PS/2 Keyboard and PS/2 Mouse Ports 2-16
Speaker Connector 2-16
Fan Headers 2-17
Wake-On-Ring 2-18
Wake-On-LAN 2-18
VGA Connector 2-19
Power SMB Connector 2-19
Power Fault 2-20
Alarm Reset 2-20
2-7 Jumper Settings 2-21
Explanation of Jumpers 2-21
GLAN Enable/Disable 2-21
CMOS Clear 2-22
VGA Enable 2-22
Watch Dog Enable 2-23
Power Force-On Enable/Disable 2-23
2-8 Onboard Indicators 2-24
GLAN LED Indicators 2-24
UID LED 2-25
UID Button 2-25
PWR OK-LED 2-26
2-9 Floppy Connector, Hard Drive, IPMI and Parallel Port Connections 2-27
Floppy Connector 2-27
IDE Connector 2-28
SIMSO IPMI 2-28

Chapter 3: Troubleshooting

3-1 Troubleshooting Procedures 3-1
Before Power On 3-1
No Power 3-1
No Video 3-1
Memory Errors 3-2

Losing the System's Setup Configuration 3-2
3-2 Technical Support Procedures 3-2
3-3 Frequently Asked Questions 3-3
3-4 Returning Merchandise for Service 3-4

Chapter 4: BIOS

4-1 Introduction 4-1
4-2 Running Setup 4-2
4-3 Main BIOS Setup 4-2
4-4 Advanced Setup 4-6
4-5 Security Setup 4-16
4-6 Boot Setup 4-17
4-7 Exit 4-18

Appendices:

Appendix A: BIOS POST Messages A-1
Appendix B: BIOS POST Codes B-1
Appendix C: Intel HostRAID Setup Guidelines C-1
Appendix D: Adaptec HostRAID Setup Guidelines D-1
Appendix E: Installing Other Software Programs and Drivers E-1

Chapter 1
Introduction

1-1 Overview

Checklist

Congratulations on purchasing your computer motherboard from an acknowledged leader in the industry. Supermicro motherboards are designed with the utmost attention to detail to provide you with the highest standards in quality and performance.

Please check that the following items have all been included with your motherboard. If anything listed here is damaged or missing, contact your retailer.

The following items are included in the retail box:

One (1) Supermicro Mainboard

One (1) IDE cable (CBL-036L-02)

One (1) floppy drive ribbon cable (CBL-022L)

Four (4) SATA cables (CBL-0044L) (*For retail only)

One (1) Supermicro CD containing drivers and utilities

One (1) User's/BIOS Manual

Optional items:

*For 1-U Riser (Left Side):

RSC-R1UU-UE8

RSC-R1UU-2E8

*For 1-U Riser (Right Side):

RSC-R1UU-E4R

*For IPMI 2.0:

AOC-SIMSO

AOC-SIMSO+ (KVM supported)

Contacting Supermicro

Headquarters

Address: SuperMicro Computer, Inc.
980 Rock Ave.
San Jose, CA 95131 U.S.A.
Tel: +1 (408) 503-8000
Fax: +1 (408) 503-8008
Email: marketing@supermicro.com (General Information)
support@supermicro.com (Technical Support)
Web Site: www.supermicro.com

Europe

Address: SuperMicro Computer B.V.
Het Sterrenbeeld 28, 5215 ML
's-Hertogenbosch, The Netherlands
Tel: +31 (0) 73-6400390
Fax: +31 (0) 73-6416525
Email: sales@supermicro.nl (General Information)
support@supermicro.nl (Technical Support)
rma@supermicro.nl (Customer Support)

Asia-Pacific

Address: SuperMicro, Taiwan
4F, No. 232-1 Liancheng Road
Chung-Ho 235, Taipei Hsien, Taiwan, R.O.C.
Tel: +886-(2) 8226-3990
Fax: +886-(2) 8226-3991
Web Site: www.supermicro.com.tw

Technical Support:
Email: support@supermicro.com.tw
Tel: 886-2-8228-1366, ext.132 or 139

Figure 1-1. SUPERO® PDSMU Image

An Important Note to the User

- All images and layouts shown in this manual were based upon the latest PCB revision available at the time of publishing of this manual. The motherboard you've received may or may not look exactly the same as the graphics shown in this manual.

Figure 1-3. Motherboard Layout
(not drawn to scale)

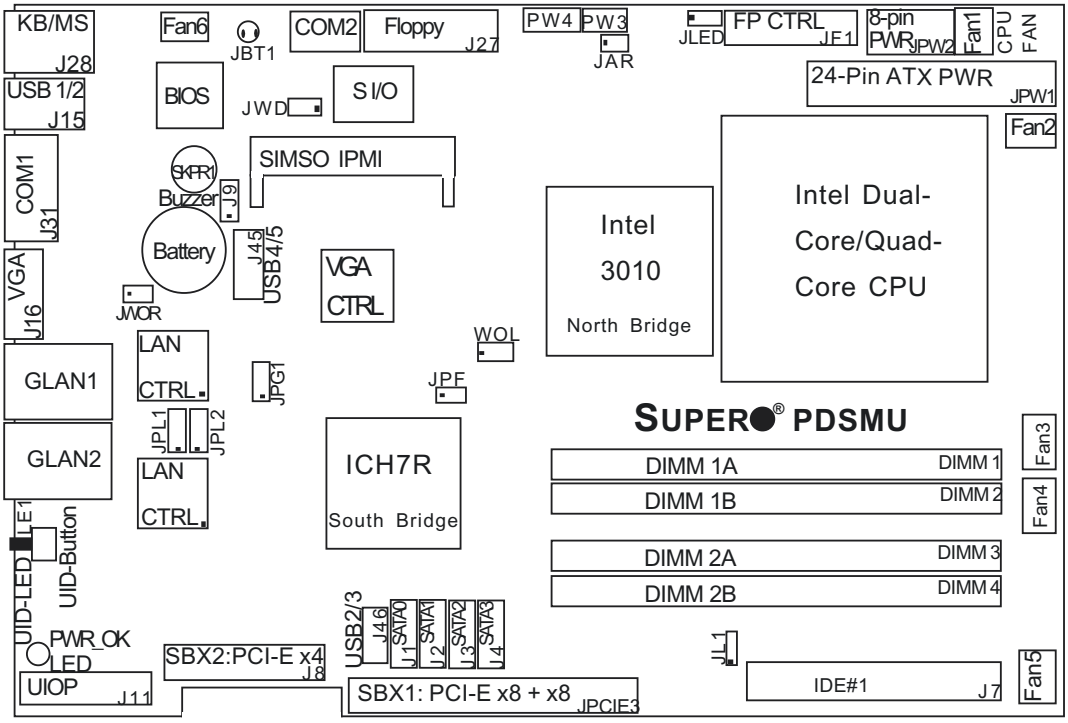

Important Notes to the User

- All images and graphics shown in this manual were based upon the latest PCB revision available at the time of publishing of this manual. The motherboard you've received may or may not look exactly the same as the graphics shown in this manual.
- See Chapter 2 for detailed information on jumpers, I/O ports and JF1 frontpanel connections.
- "■" indicates the location of "Pin 1".
- When the blue indicator (LE1) is on, either the Front Panel UID button or the Back Panel UID button has been pressed by the user to indicate the location of the unit.

PDSMU Quick Reference

Jumper	Description	Default Setting
JAR	Alarm Reset Enable	Open (Disabled)
JBT1	CMOS Clear	See Section 2-7
JPF	Power Force-On	Open (Disabled)
JPG1	VGA Enable	Pins 1-2 (Enabled)
JPL1/JPL2	Giga-bit LAN 1/2 Enable	Pins 1-2 (Enabled)
JWD	Watch Dog Enable	Pins 1-2 (Reset)

Connector	Description
24-PIn ATX (JPW1)	ATX 24-Pin Power Connector
8-Pin PWR (JPW2)	12V 8-pin Power Connector (Required)
Buzzer	Internal Buzzer
Chassis Intrusion (JL1)	Chassis Intrusion Header
COM1(J31), COM2	COM Port 1 & COM 2 Header
	DIMM#1A,#2A,#1B,#2B Memory (DIMM) Slots (1-4)
Fans 1-6	System Fan Headers (Fans 1-5), Fan1: CPU Fan
FP Control (JF1)	Front Panel Control Header
Floppy Connector (J27)	Floppy Disk Connector
IDE (J7)	IDE Primary Slot
SIMSO IPMI	SIMSO IPMI Slot
KB/MS(J28)	PS/2 Keyboard/Mouse Connector
LAN1/LAN2 (JLAN1/2)	Ethernet RJ45 (Gigabit LAN) Port1/Port2 Connectors
PWR LED (JLED)	Power LED Connector
PWR Fault (PW3)	Power Supply Failure
PWR SMB (PW4)	Power System Management Bus (I^2C)
SATA 0-3 (J1-J4)	4 Intel SATA Headers (SATA0-SATA3)
PCI-E. x 16 (JPCIE3)	SBX1: PCI-Express x16 Slot (PCI-E x8 + x8)
PCI-E. x8 (J8)	SBX2: PCI-Express x8 (physical, x4 signal)
Speaker (J9)	Speaker Connector(Pins3-4: Internal, Pins 1-4 External)
SPEC (J11)	Supermicro Proprietary Power Connector
USB0/1 (J15)	Back Panel Universal Serial Bus Ports 1,2
USB2/3 (J46),USB4/5(J45)	Front Panel Accessible USB headers 3,4,5,6
VGA (J16)	VGA Connector
WOL(WOL)	Wake On LAN header
WOR(JWOR)	Wake On Ring header

LED Indicator	Description (*See Chapter 2 for details)
LE1 (UID LED)	UID (Universal Identification) Button-In LED Indicator*
PWR-OK LED	Power Ready LED Indicator
UID-Button	LED Indicator

* LE1: When the blue indicator is on, either the Front Panel UID button or the Back Panel UID button has been pressed by the user to indicate the location of the unit.

Motherboard Features

CPU ◆ *Latest CPU technology!*

- Single Intel Quad-Core QX6700/Xeon 3000 Series (Core Dual)/Pentium D (Dual-Core)/Pentium 4 Extreme Edition/Pentium 4/Celeron D LGA (Land Grid Array) 775 Processors at system bus speeds of 1066 MHz/800 MHz/533 MHz.
- Hyper-Threading (HT), EM64T, Enhanced Intel SpeedStep (EIST) supported

Using the EM64T Feature

- Use a processor that supports the EM64T Technology
- Install a 64-bit OS (Windows XP Professional x64 Ed, Server 2003x64 Ed.)
- Install the 64-bit drivers for all MB components, devices and add-on cards

Using the Hyper-Threading (HT) Technology

- Use a CPU that supports Hyper-Threading Technology
- Install an OS that supports HT, including Windows XP/2003 Server and Linux 2.4x. (Under Linux, use the HT compiler to compile the code. For other operating systems, be sure to disable the HT feature in the BIOS.)
- Enable the HT feature in the BIOS (under the Advanced Setting) before installing a supported OS. (*Note: visit www.Intel.com for the CPU support and driver updates.)

OS Licensing Support

- Intel Quad-Core/Dual-Core CPU: Windows 2000 Professional, Windows Advanced Server, Windows XP Home, Windows XP Professional, Windows Server 2003 (Standard, Enterprise)
- Intel Quad-Core/Dual-Core CPU and Hyper-the Threading Technology: Windows 2000 Advanced Server, Windows XP Home, Windows XP Professional, Windows Server 2003 (Standard, Enterprise)

Memory ◆ *Latest memory technology!* (***Note: See Section 2-4 for details.)**

- Four DIMM slots support Dual/Single Channel DDR2 667/533/400 MHz up to 8 GB of ECC/Non-ECC Unbuffered DDR2 SDRAM

Chipset ◆ *Latest Intel chipset technology!*

- Intel 3010
- Intel ICH7R

Expansion Slots

- One (1) PCI-E x16 (PCI-E x8 + x8) (Slot SBX1)
- One (1) PCI-E x4 (via Riser Card) (Slot SBX2)

BIOS

- 8Mb Firmware Hub Phoenix BIOS
- DMI 2.3, PCI 2.2, ACPI 1.0, Plug and Play (PnP), SMBIOS 2.3, Hardware BIOS Virus Protection

PC Health Monitoring

- Onboard voltage monitors for CPU cores, Chipset Voltage, Memory Voltage, 1.8V, +3.3V, +5V, +5V Standby, +12V, and −12V
- CPU 4-phase-switching voltage regulator
- Status monitor for fan speed & System OH/Fan Fail LED/Control
- Pulse Width Modulation Fan Control & Low noise fan speed control
- Environmental temperature monitoring via BIOS, PWR-Up from AC PWR loss
- SuperDoctor III, NMI
- System Resource alert via SuperDoctor III

ACPI Features

- Slow blinking LED for suspend state indicator
- BIOS support for USB keyboard
- Main switch override mechanism
- External modem ring-on

Onboard I/O

- 1 ATA/100 EIDE Channel
- Intel ICH7R SATA Controller, 4 connectors for 4 devices with support of RAID functions 0, 1, 5 and 10
- 1 floppy port interface (up to 2.88 MB)
- 1 Fast UART 16550 compatible serial port and 1 header
- Intel 82573V and 82573L PCI-E Gigabit Ethernet Controllers
- PS/2 mouse and PS/2 keyboard ports
- Up to 6 USB (Universal Serial Bus) 2 ports and 2 headers (4 ports)
- VGA Connector
- IPMI 2.0 Socket
- Super I/O (Winbond 83627 HG) with hardware monitoring (W83793G)
- ATI ES1000 16MB

Temperature

- Monitoring CPU, chassis environment
- CPU Thermal Trip support
- Thermal Monitor 2 (TM2) (available if supported by the CPU)

Other

- Wake-on-LAN (WOL)
- Wake-on-Ring (WOR)
- PWR-OK LED Indicator ("PWR-OK LED")
- Universal Identification LED Indicator ("LE 1")

CD Utilities

- Drivers and software for Intel's 3000 chipset utilities

Dimensions

- 9.6" (W) x 12" (L) (243.84 mmx 304.8 mm)

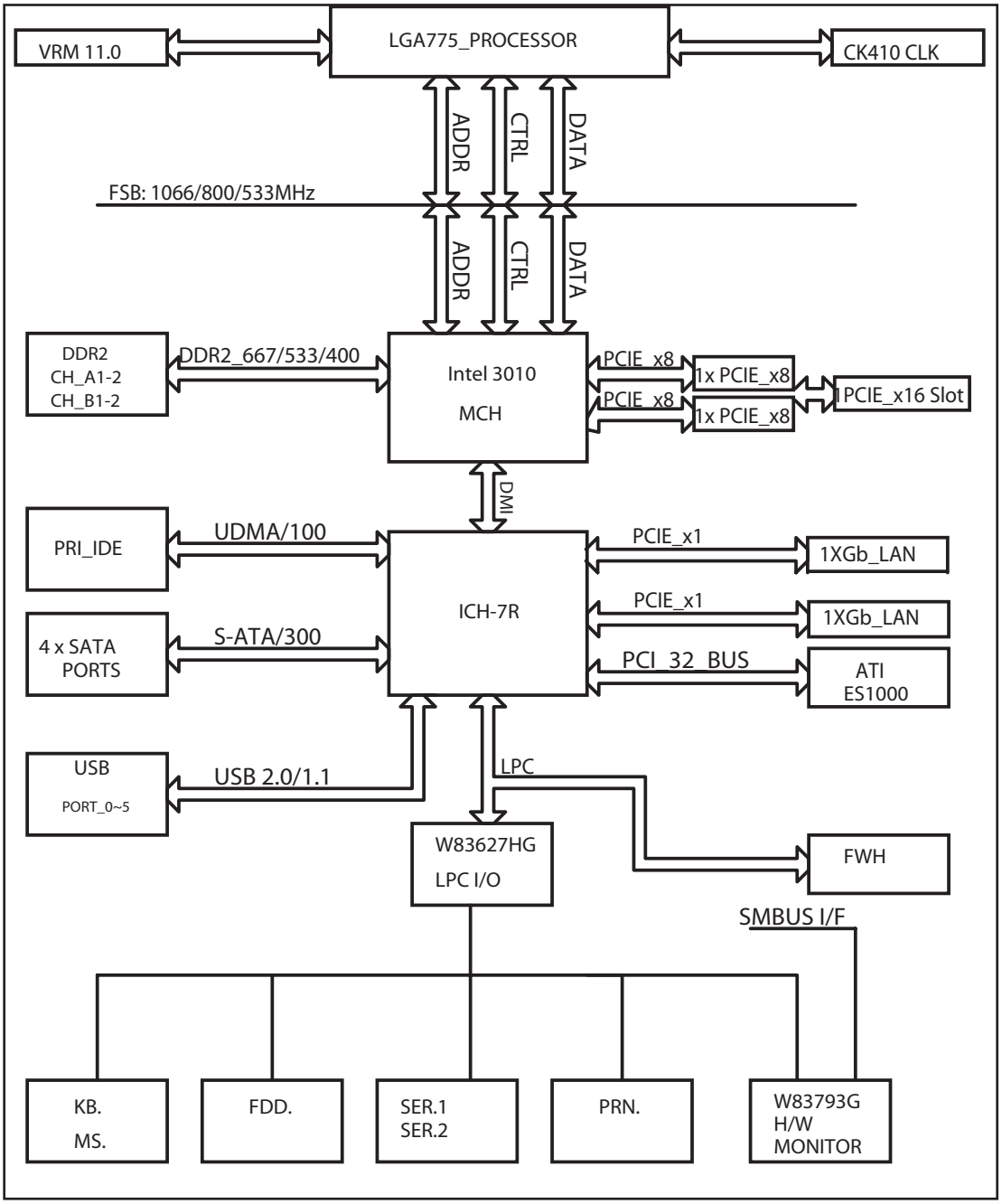

Figure 1-3. The Intel 3010 Chipset: System Block Diagram

Note: This is a general block diagram and may not exactly represent the features on your motherboard. See the following pages for the actual specifications of the motherboard.

1-2 Chipset Overview

The Intel 3010 chipset, designed for use with the Pentium 4 Processor in the 65mm/90nm Process in the LGA 775 Land Grid Array Package, is comprised of two primary components: the Memory Controller Hub (MCH) and the I/O Controller Hub (ICH7R). The PDSMU provides the performance and feature-set required for the high-end UP Server market.

Memory Controller Hub (MCH)

The function of the MCH is to manage the data flow between four interfaces: CPU interface, DDR2 System Memory Interface, PCI Express Interface, and Direct Media Interface (DMI). The MCH is optimized for the Pentium 4 processor in the 65mm/90nm process in the LGA775 Land Grid Array Package. It supports one or two channels of DDR2 SDRAM.

The I/O Controller (ICH7R) provides the data buffering and interface arbitration required for the system to operate efficiently. It also provides the bandwidth needed for the system to maintain its peak performance. The Direct Media Interface (DMI) provides the connection between the MCH and the ICH7R. The ICH7R supports four Serial ATA ports, six USB 2.0 ports and two IDE devices. In addition, the ICH7R offers the Intel Matrix Storage Technology which provides various RAID options for data protection and rapid data access. It also supports the next generation of client management through the use of PROActive technology in conjunction with Intel's next generation Gigabit Ethernet controller.

Intel ICH7R System Features

The I/O Controller Hub provides the I/O subsystem with access to the rest of the system. Functions and capabilities include:

*Advanced Configuration and Power Interface, Version 1.0 (ACPI)

*Intel I/O External Design Specification (EDS)

*Intel's 3000 Memory Controller Hub (MCH) External Design Specification (EDS)

*Intel I/O Controller Hub 7 (ICH7R) Thermal Design Guideline

*Intel 82573 Platform LAN Connect (PLC) PCI Design

*Low Pin Count (LPC) Interface

1-3 Special Features

Recovery from AC Power Loss

BIOS provides a setting for you to determine how the system will respond when AC power is lost and then restored to the system. You can choose for the system to remain Powered Off (in which case you must hit the power switch to turn it back on when the power is restored.) You can also select "Last State" from the Advanced BIOS Setup section. In this case, the system will be restored to its original state before the power outage. The default setting is Last State.

1-4 PC Health Monitoring

This section describes the PC health monitoring features of the PDSMU motherboard. All have an onboard System Hardware Monitor chip that supports PC health monitoring.

Onboard Voltage Monitors for the CPU Cores, Chipset Voltage, Memory Voltage , +1.8V, +3.3V, +5V, +5V Standby, +12V, and −12V (via SuperO Doctor III)

The onboard voltage monitor will scan these voltages continuously. Once a voltage becomes unstable, it will give a warning or send an error message to the screen. Users can adjust the voltage thresholds to define the sensitivity of the voltage monitor.

Fan Status Monitor with Firmware Speed Control

The PC health monitor can check the RPM status of the cooling fans. The onboard fans are controlled by Thermal Management via BIOS.

CPU Overheat/Fan Fail LED and Control

This feature is available when the user enables the CPU overheat warning function in the BIOS. This allows the user to define an overheat temperature. When this temperature reaches the threshold, the CPU thermal trip feature will be activated and it will send a signal to the Speaker LED and, at the same time, the CPU speed will be decreased. It will also activate the alarm if a fan failure occurs.

1-5 Power Configuration Settings

This section describes features of your motherboard that deal with power and power settings.

Slow Blinking LED for Suspend-State Indicator

When the CPU goes into a suspend state, the chassis power LED will start blinking to indicate that the CPU is in suspend mode. When the user presses any key, the CPU will wake-up and the LED will automatically stop blinking and remain on.

BIOS Support for USB Keyboard

If the USB keyboard is the only keyboard in the system, the keyboard will function like a normal keyboard during system boot-up.

Main Switch Override Mechanism

When an ATX power supply is used, the power button can function as a system suspend button. When the user presses the power button, the system will enter a SoftOff state. The monitor will be suspended and the hard drive will spin down. Pressing the power button again will cause the whole system to wake-up. During the SoftOff state, the ATX power supply provides power to keep the required circuitry in the system alive. In case the system malfunctions and you want to turn off the power, just press and hold the power button for 4 seconds. The power will turn off and no power will be provided to the motherboard.

Wake Ring-On (WOR)

Wake-up events can be triggered by a device such as the external modem ringing when the system is in the SoftOff state. Note that external modem ring-on can only be used with an ATX 2.01 (or above) compliant power supply.

Wake-On-LAN (WOL)

Wake-On-LAN is defined as the ability of a management application to remotely power up a computer that is powered off. Remote PC setup, up-dates and asset tracking can occur after hours and on weekends so that daily LAN traffic is kept to a minimum and users are not interrupted. The motherboard has a 3-pin header (WOL) to connect to the 3-pin header on a Network Interface Card (NIC) that has WOL capability. In addition, an onboard LAN controller can also support WOL without any connection to the WOL header. The 3-pin WOL header is to be used with a LAN add-on card only.

***Note**: Wake-On-LAN requires an ATX 2.01 (or above) compliant power supply.

1-6 ACPI Features

ACPI stands for Advanced Configuration and Power Interface. The ACPI specification defines a flexible and abstract hardware interface that provides a standard way to integrate power management features throughout a PC system, including its hardware, operating system and application software. This enables the system to automatically turn on and off peripherals such as CD-ROMs, network cards, hard disk drives and printers. This also includes consumer devices connected to the PC such as VCRs, TVs, telephones and stereos.

In addition to enabling operating system-directed power management, ACPI provides a generic system event mechanism for Plug and Play and an operating system-independent interface for configuration control. ACPI leverages the Plug and Play BIOS data structures while providing a processor architecture-independent implementation that is compatible with both Windows and Linux Operating Systems.

1-7 Power Supply

As with all computer products, a stable power source is necessary for proper and reliable operation. It is even more important for processors that have high CPU clock rates of 1 GHz and faster.

The SUPERO PDSMU accommodates 12V ATX power supplies. Although most power supplies generally meet the specifications required by the CPU, some are inadequate. A 2 amps of current supply on a 5V Standby rail is strongly recommended.

The PDSMU accommodates ATX power supplies. It is strongly recommended that you use a high quality power supply that meets ATX power supply Specification 2.01 or above. You should use one that will supply at least 420W of power. Also your power supply must supply 1.5A for the Ethernet ports. It must also be SSI compliant (info at http://www.ssiforum.org/). Additionally, in areas where noisy power transmission is present, you may choose to install a line filter to shield the computer from noise. It is recommended that you also install a power surge protector to help avoid problems caused by power surges.

Chapter 2
Installation

2-1 Static-Sensitive Devices

Electric-Static-Discharge (ESD) can damage electronic components. To prevent damage to your system board, it is important to handle it very carefully. The following measures are generally sufficient to protect your equipment from ESD.

Precautions

- Use a grounded wrist strap designed to prevent static discharge.
- Touch a grounded metal object before removing the board from the antistatic bag.
- Handle the board by its edges only; do not touch its components, peripheral chips, memory modules or gold contacts.
- When handling chips or modules, avoid touching their pins.
- Put the motherboard and peripherals back into their antistatic bags when not in use.
- For grounding purposes, make sure your computer chassis provides excellent conductivity between the power supply, the case, the mounting fasteners and the motherboard.
- Use only the correct type of onboard CMOS battery. Do not install the onboard upside down battery to avoid possible explosion.

Unpacking

The motherboard is shipped in antistatic packaging to avoid static damage. When unpacking the board, make sure the person handling it is static protected.

2-2 Processor and Heatsink Fan Installation

When handling the processor package, avoid placing direct pressure on the label area of the fan.

(*Notes: 1. Always connect the power cord last and always remove it before adding, removing or changing any hardware components. Make sure that you install the processor into the CPU socket before you install the CPU heatsink.

2. Intel's boxed Pentium CPU package contains the CPU fan and heatsink assembly. If you buy a CPU separately, make sure that you use only Intel-certified multi-directional heatsink and fan.

3. The Intel Pentium 4 LGA 775 heatsink and fan comes with a push-pin design and no tool is needed for installation.

4. Make sure to install the motherboard into the chassis before you install the CPU heatsink and fan.)

5. When purchasing an LGA 775 CPU or when receiving a motherboard with an LGA 775 CPU pre-installed, make sure that the CPU plastic cap is in place and none of the CPU pins are bent; otherwise, contact the retailer immediately.

6. Refer to the MB Features Section for more details on CPU support.

Installation of the LGA775 Processor

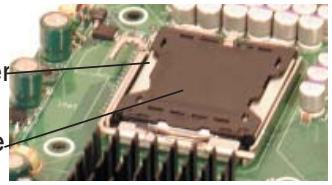

1. Press the socket lever to release the load plate, which covers the CPU socket, from its locking position.

2. Gently lift the socket lever to open the load plate.

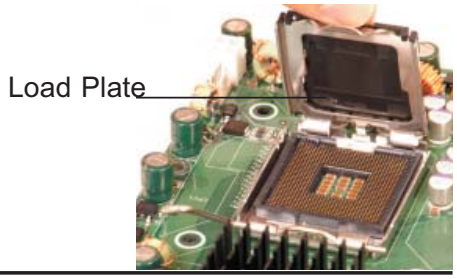

3. Locate Pin 1 on the CPU socket. (*Note: Pin 1 is the corner marked with a triangle). Please note that the North Key and the South Key are located vertically in the CPU housing.

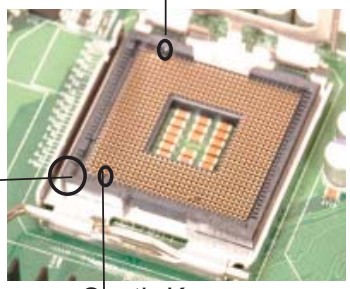

4. Position the motherboard in such a way that Pin 1 of the CPU socket is located at the left bottom of the CPU housing.

5. Use your thumb and your index finger to hold the CPU at the North Center Edge and the South Center Edge of the CPU.

6. Align Pin 1 of the CPU with Pin 1 of the socket. Once aligned, carefully lower the CPU straight down to the socket. (**Do not drop the CPU on the socket. Do not move the CPU horizontally or vertically. Do not rub the CPU against the surface or against any pins of the socket to avoid damage to the CPU or the socket.)

7. With the CPU inside the socket, inspect the four corners of the CPU to make sure that the CPU is properly installed.

8. Use your thumb to gently push the lever down and lock it in the hook.

CPU in the CPU socket

9. If the CPU is properly installed into the socket, the plastic cap will be automatically released from the load plate when the lever is pushed into the hook. Remove the plastic cap from the motherboard.

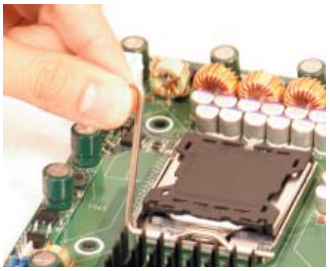

(*Warning: Please keep the plastic cap. The motherboard and the CPU must be shipped with the plastic cap properly installed to protect the CPU pins. Shipment without the CPU plastic cap properly installed will void the warranty.)

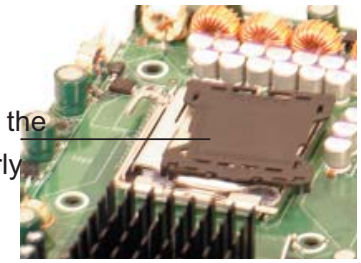

Plastic cap is released from the load plate if the CPU properly installed.

Installation of the Heatsink

1. Locate the CPU Fan on the motherboard. (Refer to the layout on the right for the CPU Fan location.)

2. Position the heatsink in such a way that the heatsink fan wires are closest to the CPU fan and are not interfered with other components.

3. Inspect the CPU Fan wires to make sure that the wires are routed through the bottom of the heatsink.

4. Remove the thin layer of the protective film from the copper core of the heatsink.

(***Warning**: CPU overheat may occur if the protective film is not removed from the heatsink.)

5. Apply the proper amount of thermal grease on the CPU. (*Note: if your heatsink came with a thermal pad, please ignore this step.)

6. If necessary, rearrange the wires to make sure that the wires are not pinched between the heatsink and the CPU. Also make sure to keep clearance between the fan wires and the fins of the heatsink.

7. Align the four heatsink fasteners with the mounting holes on the motherboard. Gently push the pairs of diagonal fasteners (#1 & #2, and #3 & #4) into the mounting holes <u>until you hear a click</u>. (*Note: Make sure to orient each fastener in a way that the narrow end of the groove is pointing outward.)

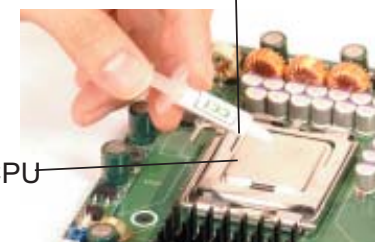

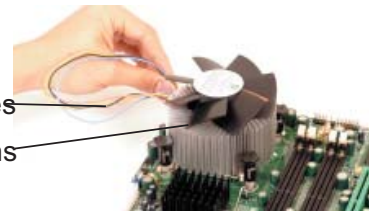

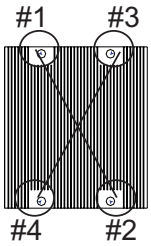

Narrow end of the groove points outward

8. Repeat Step 6 to insert all four heatsink fasteners into the mounting holes.

9. Once all four fasteners are securely inserted into the mounting holes and the heatsink is properly installed on the motherboard, connect the heatsink fan wires to the CPU Fan connector.

Heatsink Removal

1. Unplug the power cord from the power supply.
2. Disconnect the heatsink fan wires from the CPU fan header.
3. Use your finger tips to gently press on the fastener cap and turn it counterclockwise to make a 1/4 (90^0) turn, and then pull the fastener upward to loosen it.
4. Repeat Step 3 to loosen all fasteners from the mounting holes.
5. With all fasteners loosened, remove the heatsink from the CPU.

2-3 Mounting the Motherboard in the Chassis

All motherboards have standard mounting holes to fit different types of chassis. Make sure that the locations of all mounting holes for the motherboard and the chassis match. Although a chassis may have both plastic and metal mounting fasteners, metal ones are highly recommended because they ground the motherboard to the chassis. Make sure that the metal standoffs click in or are screwed in tightly. Then use a screwdriver to secure the motherboard onto the motherboard tray. (***Note**: some components are near to the mounting holes. Please take all necessary precautionary measures to prevent damage done to these components when installing the motherboard into the chassis.)

2-4 Installing DDR2 Memory

Memory Module Installation (See Figure 2-2)

STOP Exercise extreme care when installing or removing memory modules to prevent any possible damage.

1. Insert each DDR2 memory module vertically into its slot. Pay attention to the notch along the bottom of the module to prevent inserting the module incorrectly. (See support information below.)
2. Gently press down on the memory module until it snaps into place.

Support

The PDSMU supports Dual channel, ECC/Non-ECC unbuffered DDR2 667/533/400 SDRAM. Both interleaved and non-interleaved memory are supported, so you may populate any number of DIMM slots. (Populating DIMM#1A,DIMM#1B, and/or DIMM#2A, DIMM#2B with memory modules of the same size and of the same type will result in dual channel, two-way interleaved memory which is faster than the single channel, non-interleaved memory. When ECC memory is used, it may take 25-40 seconds for the VGA to display.)

***Notes**

1. Due to chipset limitation, any memory size that is larger than 4GB can only be supported by the following operating systems:

   32-Bit: Windows 2000 Advanced Server, Windows Server 2003 Enterprise Edition;

   64-Bit: Windows Server 2003 Standard x64 Edition, Windows XP Professional x64 Edition, Windows Server 2003 Enterprise x64 Edition.

2. Some old-version of DDR2-667 may not match Intel's On-Die-Temperature requirements and will automatically down-grade to run @ 533 MHz, If this occurs, contact your memory vendor to check the ODT value.

3. Due to memory allocation to system devices, memory remaining available for operational use will be reduced when 4 GB of RAM is used. The reduction in memory availability is disproportional. (Refer to the Memory Availability Table below for details.)

Possible System Memory Allocation & Availability		
System Device	Size	Physical Memory Remaining (-Available) (4 GB Total System Memory)
Firmware Hub flash memory (System BIOS)	1 MB	3.99
Local APIC	4 KB	3.99
Area Reserved for the chipset	2 MB	3.99
I/O APIC (4 Kbytes)	4 KB	3.99
PCI Enumeration Area 1	256 MB	3.76
PCI Express (256 MB)	256 MB	3.51
PCI Enumeration Area 2 (if needed) -Aligned on 256-MB boundary-	512 MB	3.01
VGA Memory	16 MB	2.85
TSEG	1 MB	2.84
Memory available to OS applications		2.84

Figure 2-2. Installing DIMM into Slot

To Install:

Insert module vertically and press down until it snaps into place. Pay attention to the notch.

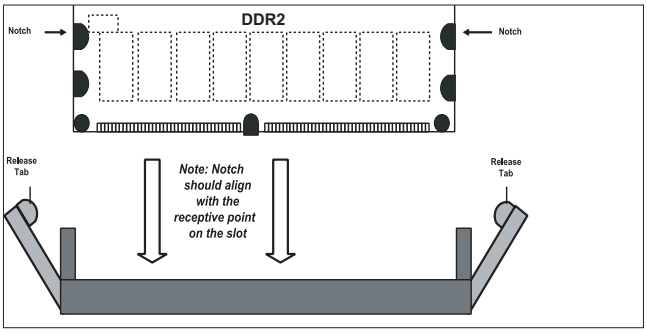

To Remove:

Use your thumbs to gently push each release tab outward to release the DIMM from the slot.

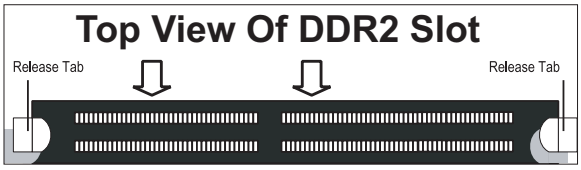

2-5 Control Panel Connectors/IO Ports

The I/O ports are color coded in conformance with the PC 99 specification. See Figure 2-3 below for the colors and locations of the various I/O ports.

A. Back Panel Connectors/IO Ports

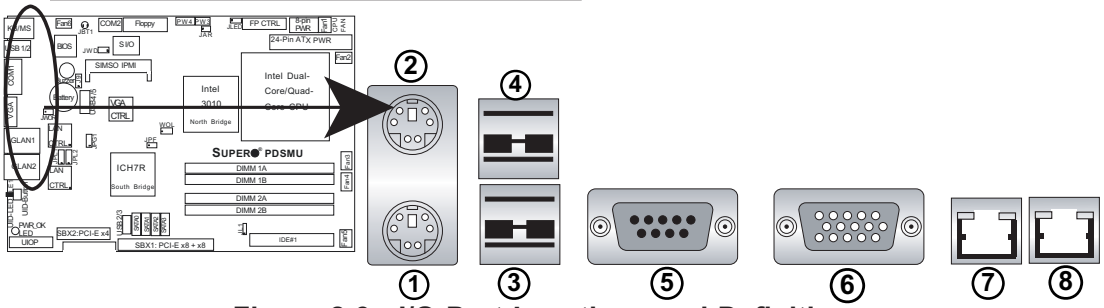

Figure 2-3. I/O Port Locations and Definitions

Back Panel Connectors

1. Keyboard (Purple)
2. PS/2 Mouse (Green)
3. Back Panel USB Port 1
4. Back Panel USB Port 2
5. COM Port 1 (Turquoise)
6. VGA Port (Blue)
7. Gigabit LAN 1
8. Gigabit LAN 2

(*See Section 2-5 for details.)

B. Front Control Panel

JF1 contains header pins for various buttons and indicators that are normally located on a control panel at the front of the chassis. These connectors are designed specifically for use with Supermicro server chassis. See Figure 2-4 for the descriptions of the various control panel buttons and LED indicators. Refer to the following section for descriptions and pin definitions.

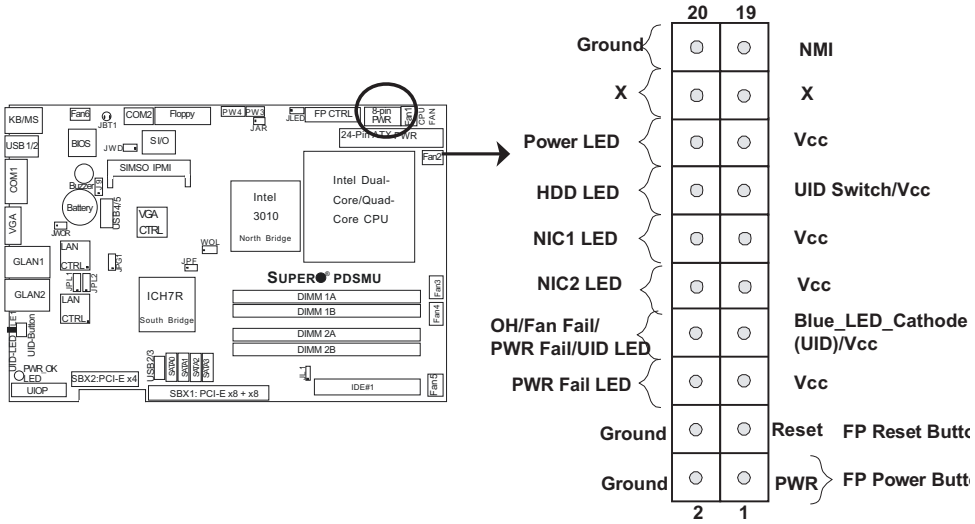

Figure 2-4. JF1 Header Pins

C. Front Control Panel Pin Definitions

NMI Button

The non-maskable interrupt button header is located on pins 19 and 20 of JF1. Refer to the table on the right for pin definitions.

NMI Button Pin Definitions (JF1)	
Pin#	Definition
19	Control
20	Ground

Power LED

The Power LED connection is located on pins 15 and 16 of JF1. Refer to the table on the right for pin definitions.

Power LED Pin Definitions (JF1)	
Pin#	Definition
15	+5V
16	Ground

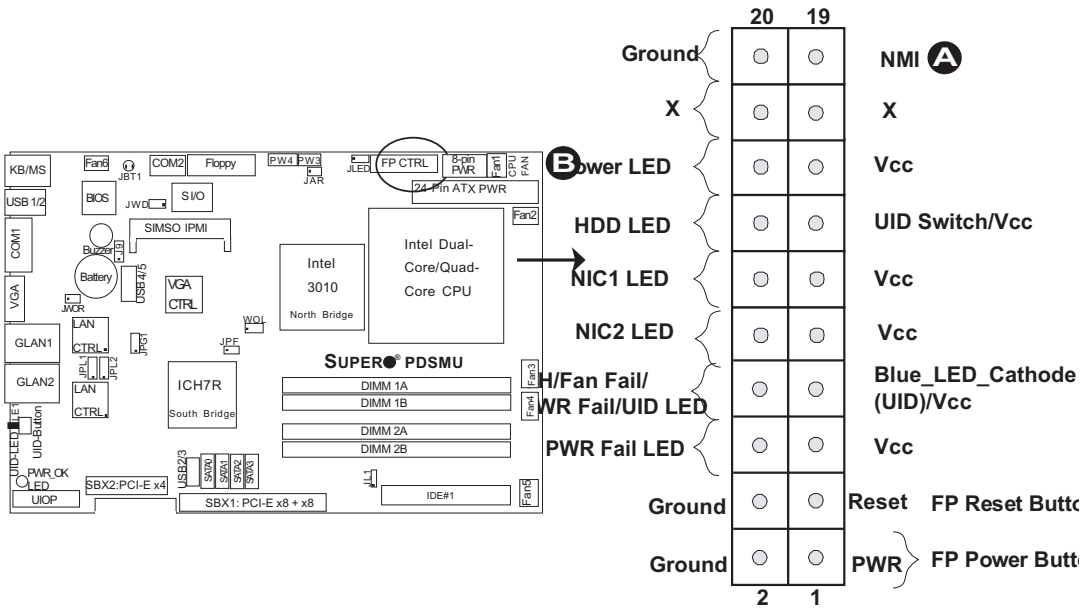

HDD LED/FP UID Switch

The Front Panel UID Switch connection is located on pin 13 of JF1. Connect a cable with a switch attached to pin 13 of JF1 to provide Unit Identification to your system. (*For more information on the UID Switches, please refer to UID Switches on Page 2-22.) The HDD LED connection is located on pins 13 (Vcc) and 14 of JF1. Attach the hard drive LED cable here to display disk activity (for any hard drives on the system, including Serial ATA and IDE). See the table on the right for pin definitions.

HDD LED Pin Definitions (JF1)	
Pin#	Definition
13	UID Switch/+5V (for HDD Act)
14	HD Active

NIC1/NIC2 LED Indicators

The NIC (Network Interface Controller) LED connection for GLAN port1 is located on pins 11 and 12 of JF1 and the LED connection for GLAN Port2 is on Pins 9 and 10. Attach the NIC LED cables to display network activity. Refer to the table on the right for pin definitions.

GLAN1/2 LED Pin Definitions (JF1)	
Pin#	Definition
9/11	Vcc
10/12	PWR Fail

A. FP UID Switch
B. HDD LED
C. NIC1 LED
D. NIC2 LED

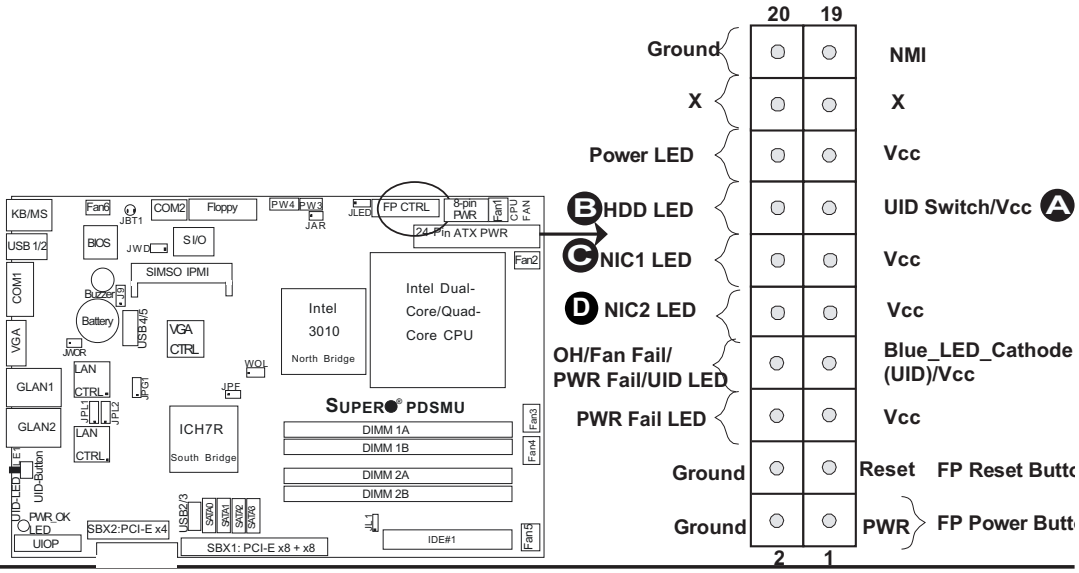

Overheat (OH)/Fan Fail/PWR Fail/FP UID LED

Connect an LED to the Overheat/Fan Fail/PWR Fail/UID (Unit ID) LED connection on pins 7 and 8 of JF1 to provide advanced warnings of chassis overheating, power failure or fan failure in addition to providing unit identification for your system. (*For more information on UID Switches, please refer to Pages 2-11 and 2-22.) Refer to the table on the right for pin definitions.

OH/Fan Fail/PWR Fail/FP UID LED Pin Definitions (JF1)	
Pin#	Definition
7	Blue_LED_Cathode (UID)
8	OH_Fan Fail_PWR Fail_UID

OH/Fan Fail/PWR Fail/FP UID Indicator Status	
State	Definition
Off	System Normal
Red On	Overheat
Red Flashing	Fan Fail/PWR Fail
Blue On	FP UID

Power Fail LED

The Power Fail LED connection is located on pins 5 and 6 of JF1. Refer to the table on the right for pin definitions.

PWR Fail LED Pin Definitions (JF1)	
Pin#	Definition
5	Vcc
6	Ground

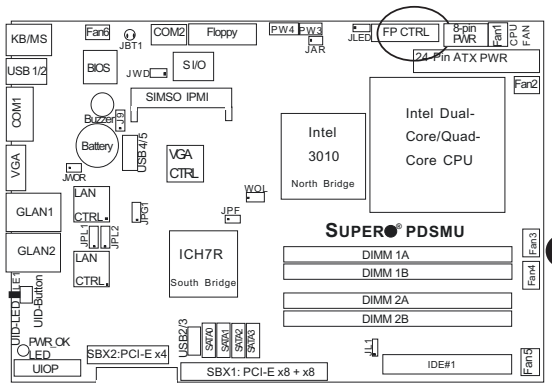

A. OH/Fan Fail/PWR Fail/UIE LED

B. PWR Supply Fail

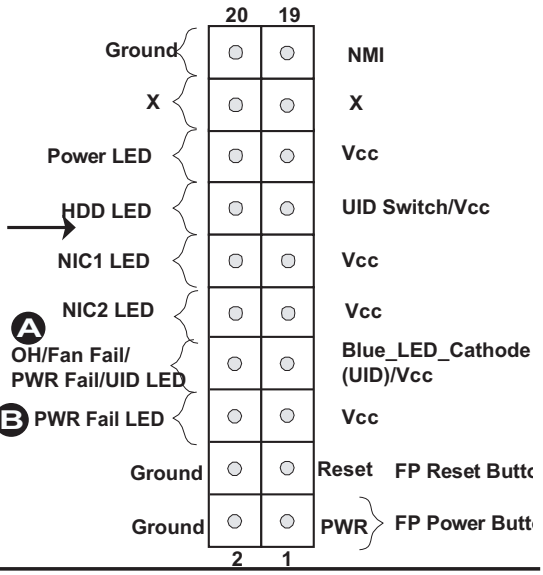

Reset Button

The Reset Button connection is located on pins 3 and 4 of JF1. Attach it to the hardware reset switch on the computer case. Refer to the table on the right for pin definitions.

Reset Button Pin Definitions (JF1)	
Pin#	Definition
3	Reset
4	Ground

Power Button

The Power Button connection is located on pins 1 and 2 of JF1. Momentarily contacting both pins will power on/off the system. This button can also be configured to function as a suspend button (with a setting in BIOS - see Chapter 4). To turn off the power when set to suspend mode, press the button for at least 4 seconds. Refer to the table on the right for pin definitions.

Power Button Pin Definitions (JF1)	
Pin#	Definition
1	Signal
2	+3V Standby

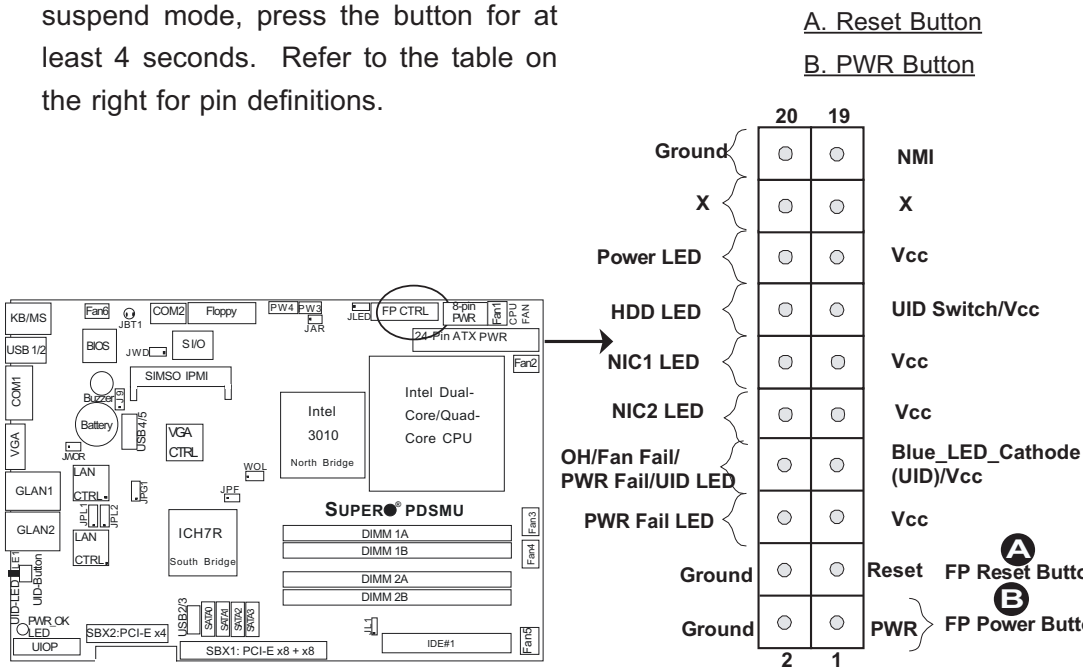

2-6 Connecting Cables

ATX Power Connector

The main power supply connector (JPW1) on the PDSMU meets the SSI (Superset ATX) specification. You can only use a 24-pin power supply cable on the motherboard. Make sure that the orientation of the connector is correct. You must also use the 8-pin (JPW2) processor power connector for adequate power supply to the system (*See below.) See the table on the right for pin definitions.

ATX Power 24-pin Connector Pin Definitions (PW1)

Pin#	Definition	Pin #	Definition
13	+3.3V	1	+3.3V
14	-12V	2	+3.3V
15	COM	3	COM
16	PS_ON	4	+5V
17	COM	5	COM
18	COM	6	+5V
19	COM	7	COM
20	Res (NC)	8	PWR_OK
21	+5V	9	5VSB
22	+5V	10	+12V
23	+5V	11	+12V
24	COM	12	+3.3V

Processor Power Connector

In addition to the Primary ATX power connector (above), the 12V 8-pin Processor Power Connector located at JPW2 must also be connected to your power supply to provide adequate power supply to the system.

Secondary Power Connector Pin Definitions (PW2)

Pins	Definition
1 through 4	Ground
5 through 8	+12V

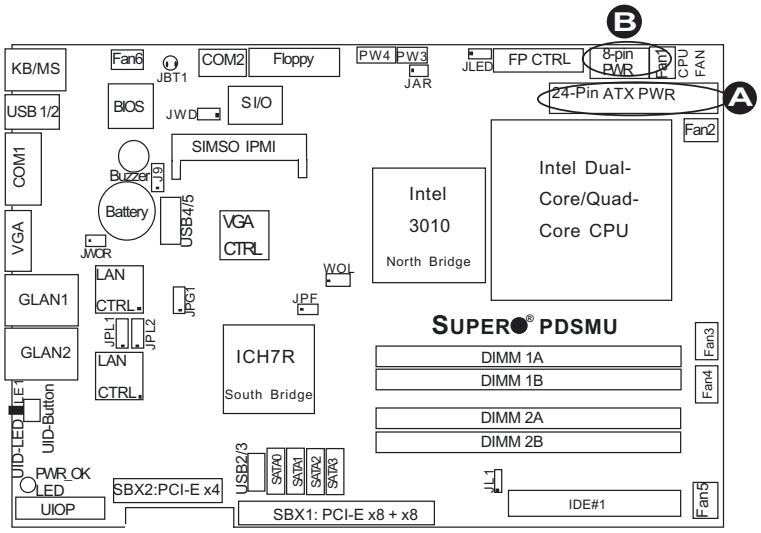

A. 24-Pin ATX PWR

B. 8-Pin 12V PWR

Serial Ports

Two serial headers: COM1 (J31), COM2 are included on the motherboard. COM1 (J31) is a port located next to VGA port located on the I/O backplane. COM2 port provides front-panel access. See the table on the right for pin definitions.

Serial Port Pin Definitions (COM1/COM2)

Pin #	Definition	Pin #	Definition
1	CD	6	DSR
2	RD	7	RTS
3	TD	8	CTS
4	DTR	9	RI
5	Ground	10	NC

Note: Pin 10 is included on the header but not on the port. NC indicates no connection.

Chassis Intrusion

A Chassis Intrusion header is located at JL1. Attach the appropriate cable to inform you of a chassis intrusion.

Chassis Intrusion Pin Definitions (JL1)

Pin#	Definition
1	Intrusion Input
2	Ground

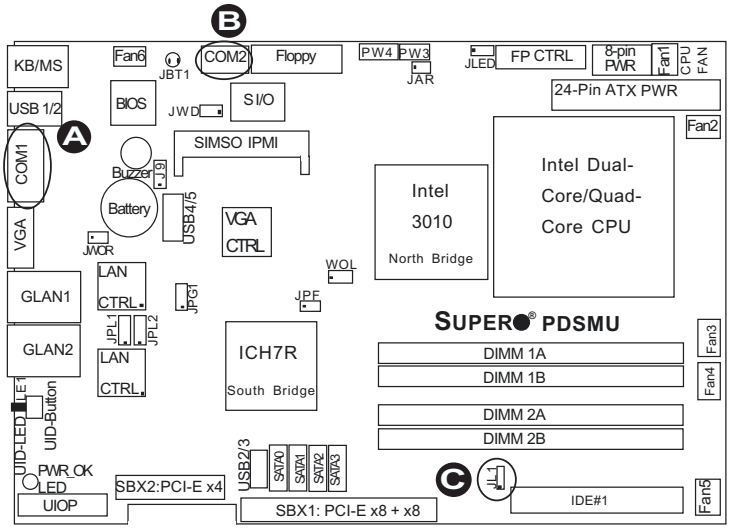

A. COM1

B. COM2

C. Chassis Intrusion

Universal Serial Bus (USB)

Two Universal Serial Bus ports (USB 0/1) are located at (J15) on the I/O backplane. Additional four USB ports (USB 2/3, USB 4/5) are located at J45 and J46 on the motherboard. These ports can be used to provide front side chassis access (cables not included). See the tables on the right for pin definitions.

Back Panel USB (USB 0/1)

Pin#	Definitions
1	+5V
2	PO-
3	PO+
4	Ground
5	N/A

Front Panel USB Pin Definitions (USB 2/3/4/5)

USB 2/4 Pin #	Definition	USB 3/5 Pin #	Definition
1	+5V	1	+5V
2	PO-	2	PO-
3	PO+	3	PO+
4	Ground	4	Ground
5	Key	5	No connection

GLAN (Giga-bit Ethernet Ports)

Two G-bit Ethernet ports (GLAN) are located next to the VGA port on the I/O backplane. This port accepts RJ45 type cables.

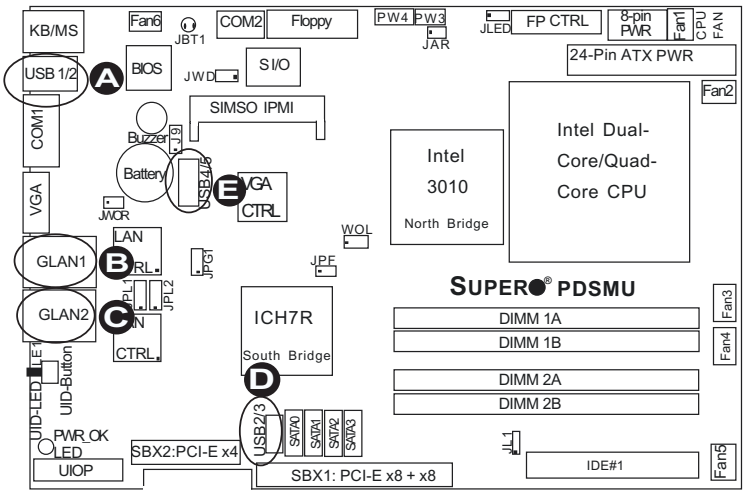

A. USB 1/2

B. GLAN1

C. GLAN2

D. FP USB3/4

E. FP USB5/6

ATX PS/2 Keyboard and PS/2 Mouse Ports

The ATX PS/2 keyboard and PS/2 mouse are located next to the Back Panel USB ports on the motherboard. See the table at right for pin definitions. (Note: NC=No connection.)

PS/2 Keyboard and Mouse Port Pin Definitions	
Pin#	Definition
1	Data
2	NC
3	Ground
4	VCC
5	Clock

Speaker Connector

The speaker connector, located at J9, allows you to choose using the internal or an external speaker. For the internal speaker, short pins 3 and 4. To use an external speaker, place a speaker cable header on all four pins of J9. See the table on the right.

Speaker Connector (J9)	
Pin Setting	Definition
Pins 3-4	Internal Speaker
Pins 1-4	External Speaker

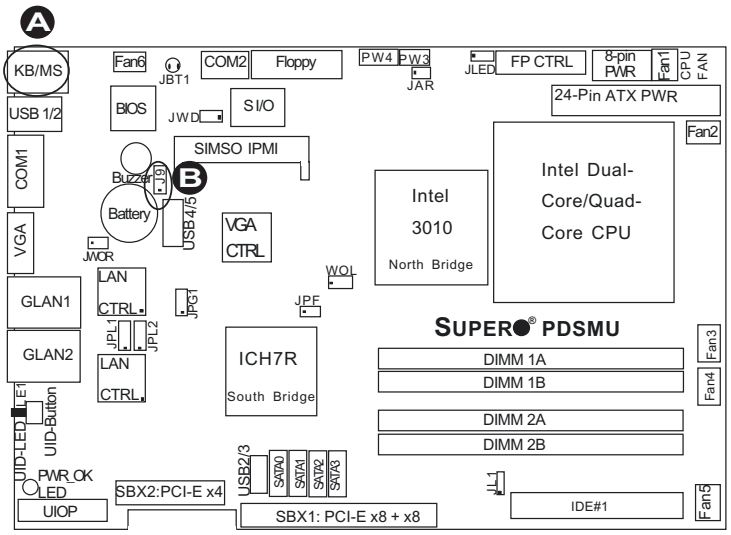

A. KB/Mouse

B. Speaker Connector

Fan Headers

The PDSMU has six fan headers (Fan1 to Fan6). (***Note**: all these fans are 4-pin fans. However, Pins 1-3 of the fan headers are backward compatible with the traditional 3-pin fans.) See the table on the right for pin definitions. (*The onboard fan speeds are controlled by the Fan Speed Mode via Thermal Management in the BIOS Hardware Monitoring Section. When using Thermal Management settings, please use all 3-pin fans or all 4-pin fans on the motherboard. Please do not use 3-pin fans and 4-pin fans on the same board. The default setting is "Disabled" which will allow the onboard fans to constantly run at the full speed.)

Fan Header Pin Definitions (Fan1-5)	
Pin#	Definition
1	Ground (Black)
2	+12V (Red)
3	Tachometer
4	PWM_Control

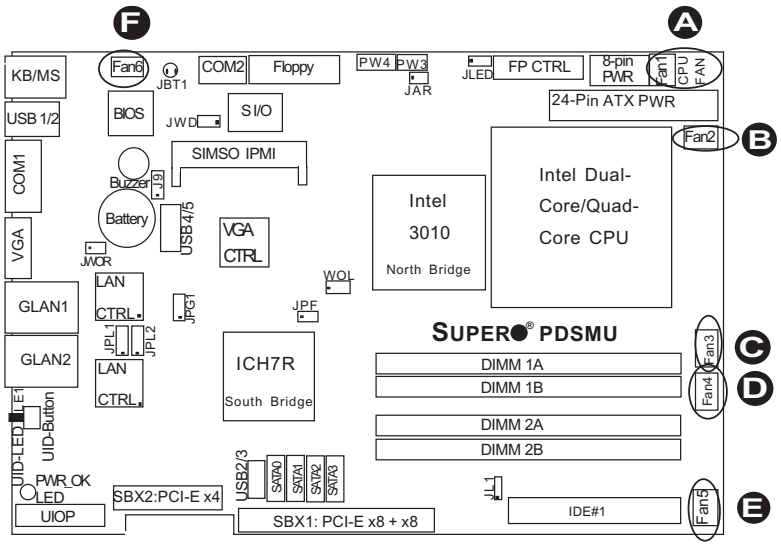

A. Fan 1

B. Fan 2

C. Fan 3

D. Fan 4

E. Fan 5

F. Fan 6 (CPU Fan)

Wake-On-Ring

The Wake-On-Ring header is located at JWOR. This function allows your computer to be "awakened" by an incoming call to the modem when in the suspend state. See the table on the right for pin definitions. You must have a Wake-On-Ring card and a cable to use this feature.

Wake-On-Ring Pin Definitions (JWOR)	
Pin#	Definition
1	Ground (Black)
2	Wake-up

Wake-On-LAN

The Wake-On-LAN header is located at WOL. See the table on the right for pin definitions. You must enable the LAN Wake-Up function in the BIOS and also have a LAN card with a Wake-on-LAN connector and a cable to use this feature.

Wake-On-LAN Pin Definitions (JWOL)	
Pin#	Definition
1	+5V Standby
2	Ground
3	Wake-up

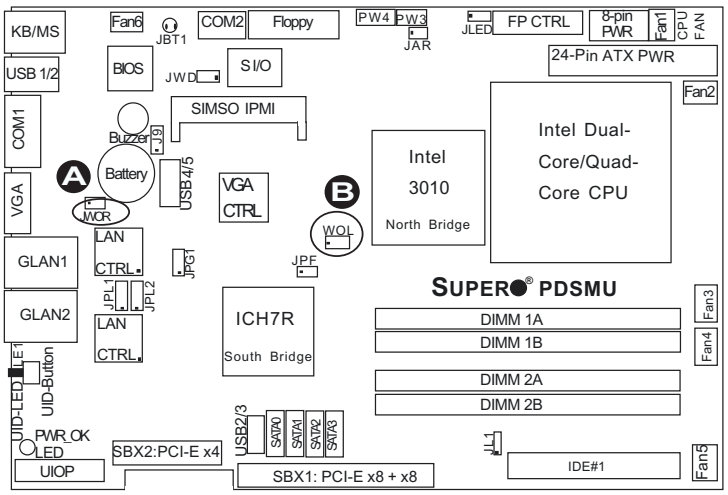

A. WOR

B. WOL

VGA Connector

A VGA connector (J16) is located next to COM1 Port on the I/O backplane. Refer to the board layout below for the location.

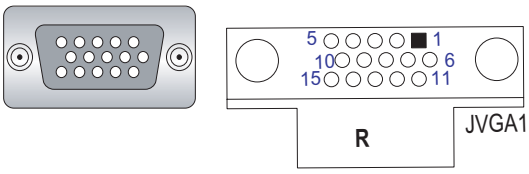

VGA/CRT Pin Definitions			
Pin#	Definition	Pin#	Definition
1	Red	10	Ground
2	Green	11	MS0
3	Blue	12	MS1: SDA (DDC Data)
4	MS2	13	HSYNC
5	Ground	14	VSYSNC
6	Ground	15	MS3: SCL (DDC CLK)
7	Ground		
8	Ground		
9	NC*		
*NC= No Connection			

Power SMB (I^2C) Connector

Power SMB (I^2C) Connector (PW4) monitors power supplies, fans and system temperatures. See the table on the right for pin definitions.

PWR SMB Pin Definitions	
Pin#	Definition
1	Clock
2	Data
3	PWR Fail
4	Ground
5	+3.3V

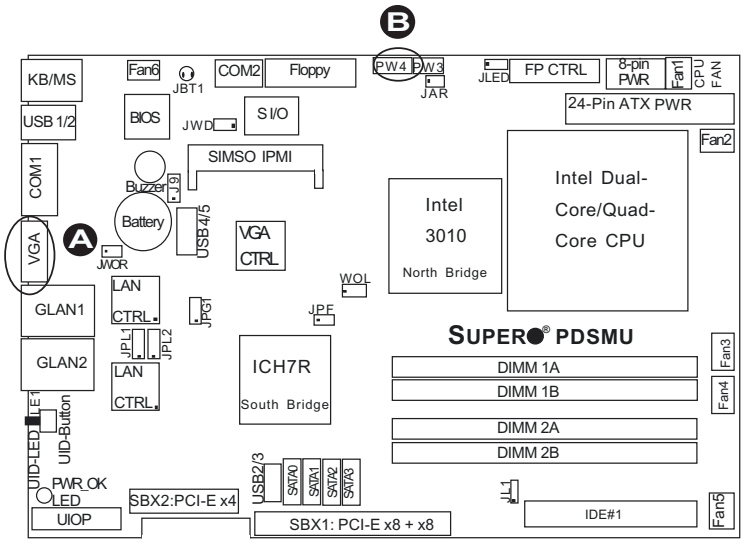

A. VGA

B. PWR SMB

Power Fault (Power Supply Failure)

Connect a cable from your power supply to the Power Fail (PSF) header (PW3) to provide a warning of power supply failure. This warning signal is passed through the PWR_LED pin to indicate of a power failure on the chassis. See the table on the right for pin definitions.

PWR Supply Fail LED Pin Definitions	
Pin#	Definition
1	PWR 1: Fail
2	PWR 2: Fail
3	PWR 3: Fail
4	Signal: Alarm Reset

Note: This feature is only available when using Supermicro redundant power supplies.

Alarm Reset

If three power supplies are installed and Alarm Reset (JAR) is enabled, the system will notify you when any of the three power modules fails. Connect JAR to a micro-switch to turn off the alarm that is activated when a power module fails. See the table on the right for pin definitions.

Alarm Reset	
Pin Setting	Definition
Pin 1	Ground
Pin 2	+5V

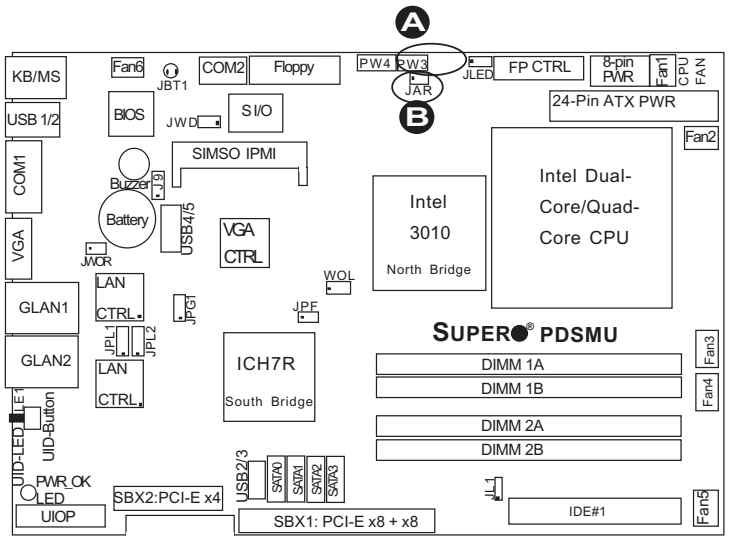

A. Power Fault

B. Alarm Reset

2-7 Jumper Settings

Explanation of Jumpers

To modify the operation of the motherboard, jumpers can be used to choose between optional settings. Jumpers create shorts between two pins to change the function of the connector. Pin 1 is identified with a square solder pad on the printed circuit board. See the motherboard layout pages for jumper locations.

Note: On two pin jumpers, "Closed" means the jumper is on and "Open" means the jumper is off the pins.

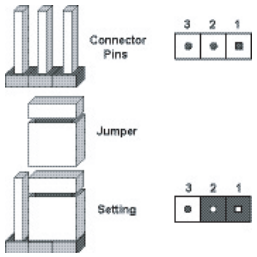

GLAN Enable/Disable

JPL1 and JPL2 enable or disable GLAN 1 Port and GLAN 2 Port on the motherboard. See the table on the right for jumper settings. The default setting is enabled.

GLAN 1/2 Enable Jumper Settings	
Jumper Setting	Definition
1-2	Enabled
2-3	Disabled

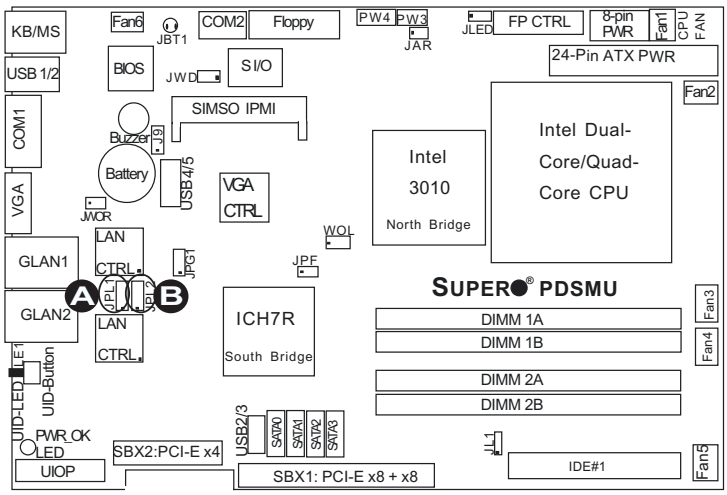

A. GLAN1 Enable

B. GLAN2 Enable

CMOS Clear

JBT1 is used to clear CMOS. Instead of pins, this "jumper" consists of contact pads to prevent accidental clearing of CMOS. To clear CMOS, use a metal object such as a small screwdriver to touch both pads at the same time to short the connection. Always remove the AC power cord from the system before clearing CMOS.

***Note:** For an ATX power supply, you must completely shut down the system, remove the AC power cord and then short JBT1 to clear CMOS. ***Do not use the PW_ON connector to clear CMOS**.*

VGA Enable/Disable

JPG1 enables or disables the VGA Connector on the motherboard. See the table on the right for jumper settings. The default setting is enabled.

VGA Enable/Disable Jumper Settings	
Jumper Setting	Definition
Pins 1-2	Enabled
Pins 2-3	Disabled

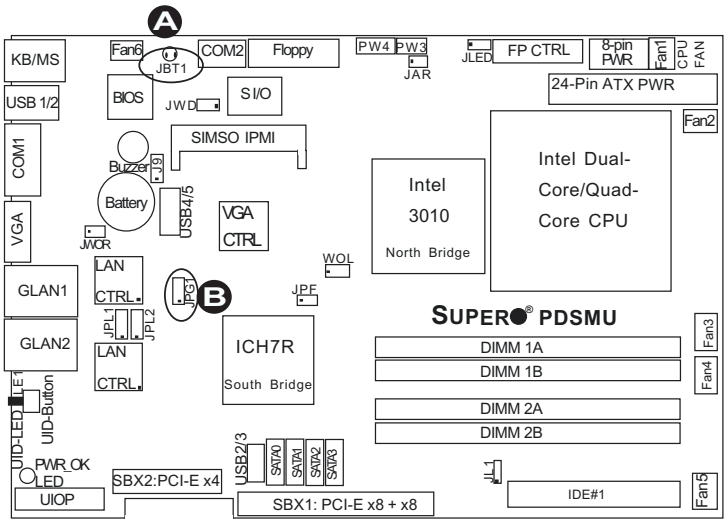

A. Clear CMOS

B. VGA Enabled

Watch Dog Enable

JWD controls Watch Dog, a system monitor that takes actions when a software application hangs. Close Pins 1-2 to reset the system if a program hangs. Close Pins 2-3 to generate a non-maskable interrupt for the program that hangs. (This function requires software support.). Watch Dog must also be enabled in the BIOS.

Watch Dog Jumper Settings (JWD)	
Jumper Setting	Definition
Pins 1-2	Reset
Pins 2-3	NMI
Open	Disabled

Power Force On Enable/ Disable

Jumper JPF allows you to enable or disable the Power Force On function. If enabled, the power will always stay on automatically. If this function is disabled (the normal setting), the user needs to press the power button to power on the system.

Power Force On Enable/Disable Jumper Settings (JPF)	
Jumper Setting	Definition
Open	Normal
Closed	Force On

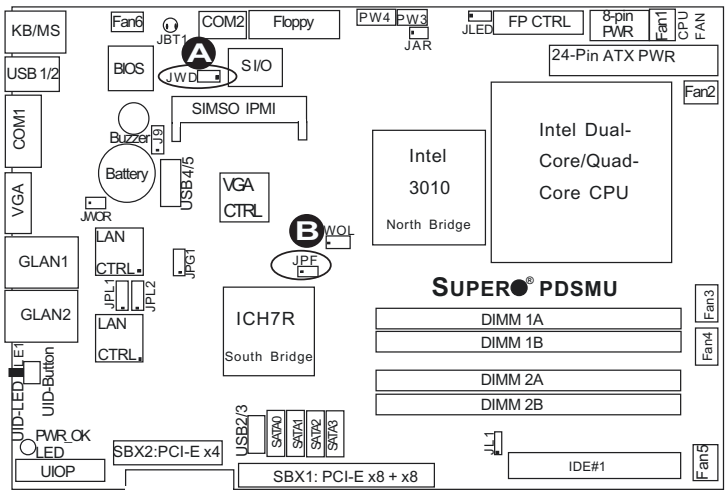

A. Watch Dog Enable

B. Power Force On

2-8 Onboard Indicators

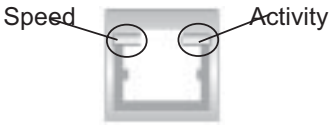

(**Rear View**: when viewing it from the rear side of the chassis.

GLAN LEDs

There are two GLAN ports on the motherboard. Each Gigabit Ethernet LAN port has two LEDs. The yellow LED indicates activity while the other LED may be green, amber or off to indicate the speed of the connection. See the table at right for the functions associated with the second LED.

GLAN Right LED Activity Indicator	
LED Color	Definition
Yellow	Flashing: LAN Port Active

GLAN Left LED Connection Speed Indicator	
LED Color	Definition
Off	10Mbps or No Connection
Green	100 Mbps
Amber	1 Gbps

Power LED

The Power LED connector is designated JLED. This connection indicates the status of power supplied to the system. See the table on the right for pin definitions.

PWR LED Pin Definitions	
Pin#	Definition
1	+5V
2	Key
3	Ground

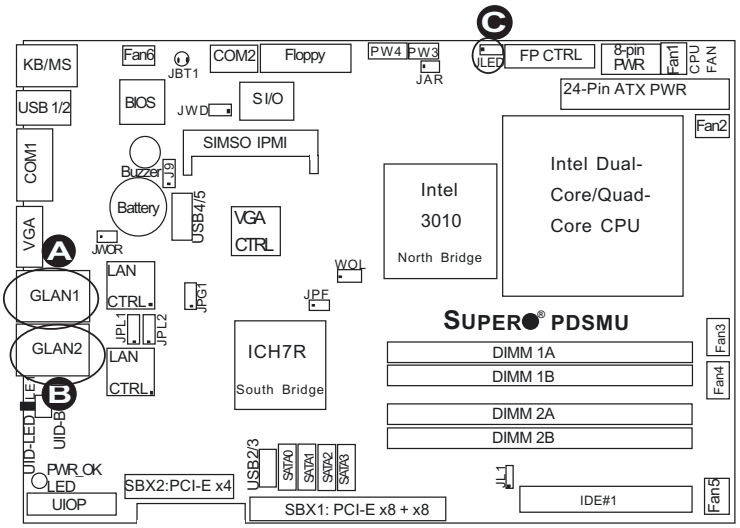

A. GLAN1 Port

B. GLAN2 Port

C. Power LED (JLED)

UID-LED

The Universal Identification LED Indicator is located at LE1 on the motherboard. When the blue indicator is on, either the Front Panel UID button or the Back Panel UID button has been pressed by the user to indicate the location of the unit.

See the layout below for the LED location.

UID LED Indicator (LE1)	
LED Color	Definition
Off	UID-Button: not in
On	Blue light on, UID-Button is installed

UID-Button

A Universal Identification Button is located next to the GLAN2 Port on the motherboard. See the Graphics below for pin locations. Refer to the table on the right for pin definitions.

UID-Button	
Pin#	Definition
1	Ground
2	Ground
3	Button In
4	Ground

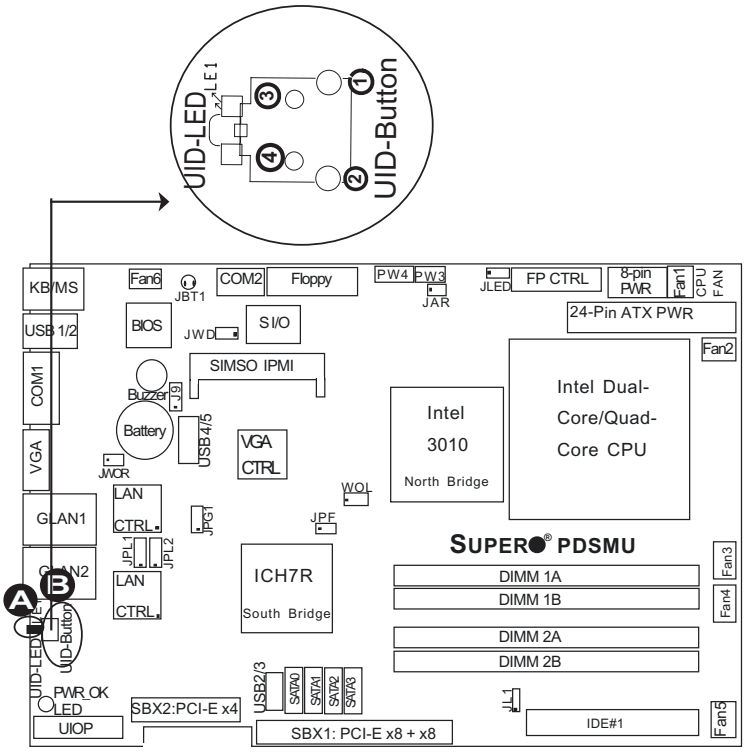

A. UID-LED (LE1)

B. UID-Button

PWR OK-LED

The PWR OK-LED Indicator is located next to the SPEC Slot on the motherboard. Refer to the table on the right for pin definitions.

PWR OK-LED	
Color	Definition
Red	PWR or CPU Failure, CPU Overheat
Amber	System: Off, PWR Cable connected
Green	System: On, Operation: Normal

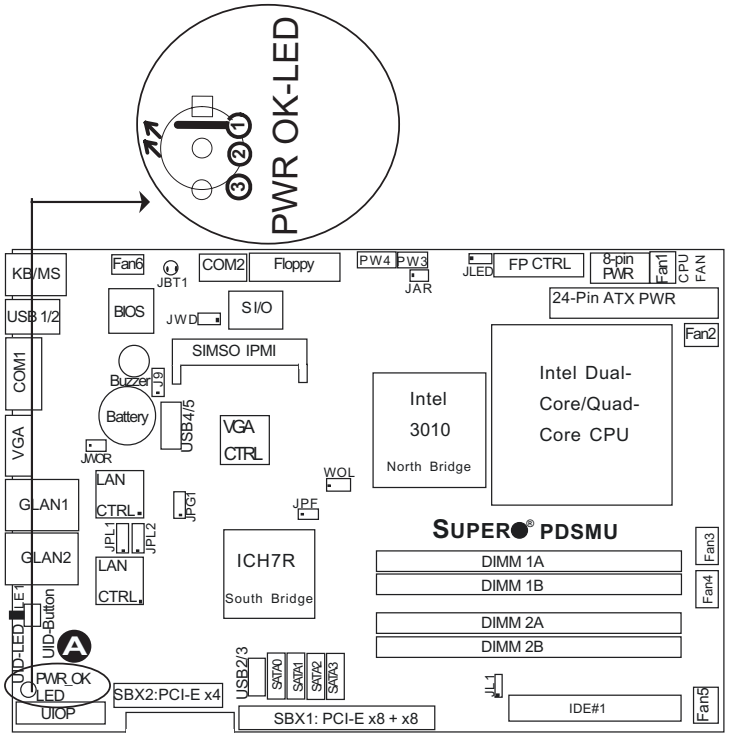

A. PWR-OK LED

2-9 Floppy, Hard Disk Drive, IPMI and Printer Connections

Note the following when connecting the floppy and hard disk drive cables:

- The floppy disk drive cable has seven twisted wires.
- A red mark on a wire typically designates the location of pin 1.
- A single floppy disk drive ribbon cable has two connectors to provide for two floppy disk drives. The connector with twisted wires always connects to drive A, and the connector that does not have twisted wires always connects to drive B.

Floppy Connector

The floppy connector is located between the IDE connectors and the parallel port. See the table below for pin definitions.

Floppy Drive Connector Pin Definitions

Pin#	Definition	Pin #	Definition
1	Ground	2	FDHDIN
3	Ground	4	Reserved
5	Key	6	FDEDIN
7	Ground	8	Index
9	Ground	10	Motor Enable
11	Ground	12	Drive Select B
13	Ground	14	Drive Select B
15	Ground	16	Motor Enable
17	Ground	18	DIR
19	Ground	20	STEP
21	Ground	22	Write Data
23	Ground	24	Write Gate
25	Ground	26	Track 00
27	Ground	28	Write Protect
29	Ground	30	Read Data
31	Ground	32	Side 1 Select
33	Ground	34	Diskette

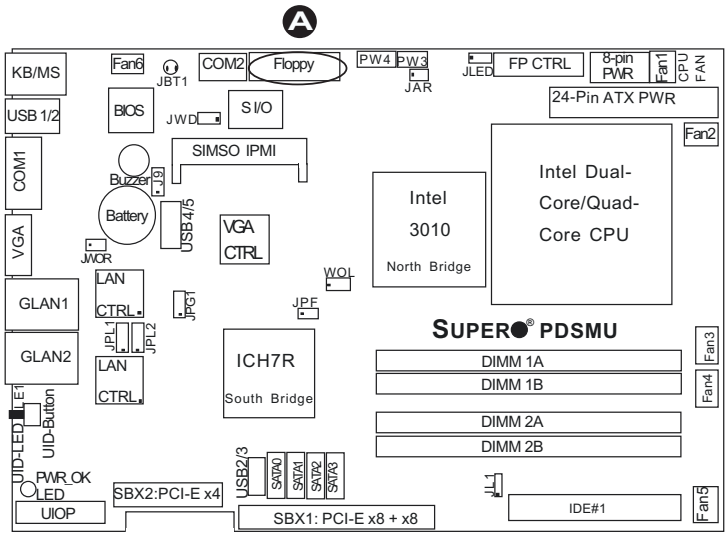

A. Floppy

IDE Connector

There is an IDE Connector on the motherboard. See the table on the right pin definitions.

IDE Drive Connectors Pin Definitions (IDE)

Pin#	Definition	Pin #	Definition
1	Reset IDE	2	Ground
3	Host Data 7	4	Host Data 8
5	Host Data 6	6	Host Data 9
7	Host Data 5	8	Host Data 10
9	Host Data 4	10	Host Data 11
11	Host Data 3	12	Host Data 12
13	Host Data 2	14	Host Data 13
15	Host Data 1	16	Host Data 14
17	Host Data 0	18	Host Data 15
19	Ground	20	Key
21	DRQ3	22	Ground
23	I/O Write	24	Ground
25	I/O Read	26	Ground
27	IOCHRDY	28	BALE
29	DACK3	30	Ground
31	IRQ14	32	IOCS16
33	Addr1	34	Ground
35	Addr0	36	Addr2
37	Chip Select 0	38	Chip Select 1
39	Activity	40	Ground

SIMSO IPMI Socket

There is a SIMSO IPMI Socket on the motherboard. Refer to the layout below for the location of SIMSO IPMI Socket.

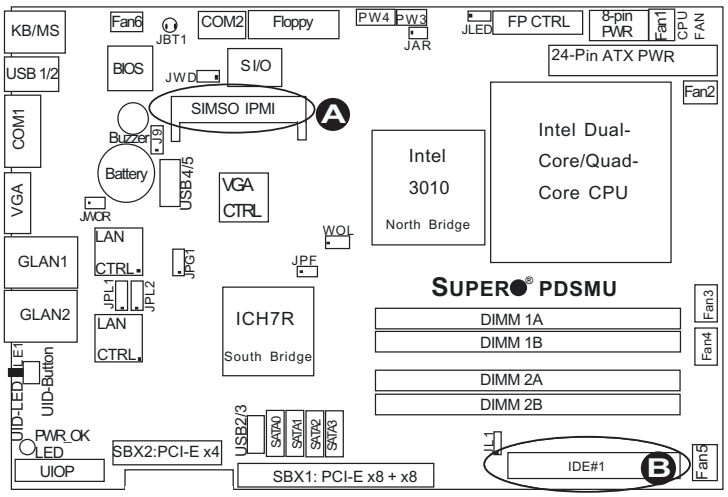

A. SIMSO IPMI

B. IDE#1

Chapter 3
Troubleshooting

3-1 Troubleshooting Procedures

Use the following procedures to troubleshoot your system. If you have followed all of the procedures below and still need assistance, refer to the 'Technical Support Procedures' and/or 'Returning Merchandise for Service' section(s) in this chapter. Always disconnect the AC power cord before adding, removing, changing or installing any hardware components.

Before Power On

- Make sure the 8-pin 12v power connector at JPW2 is connected.
- Make sure that there are no short circuits between the motherboard and chassis.
- Disconnect all ribbon/wire cables from the motherboard, including those for the keyboard and mouse.
- Remove all add-on cards.
- Install a CPU and heatsink (making sure that it is fully seated,) and then, connect the chassis speaker and the power LED to the motherboard. Check all jumper settings as well.
- Make sure to use the correct type of CMOS battery as specified by the Manufacturer. Do not install the CMOS battery upside down to avoid possible explosion.

No Power

- Make sure that there are no short circuits between the motherboard and the chassis.
- Make sure that all jumpers are set to their default positions.
- Check if the 115V/230V switch on the power supply is properly set.
- Turn the power switch on and off to test the system.
- The battery on your motherboard may be old. Check to verify that it still supplies ~3VDC. If it does not, replace it with a new one.

No Video

- If the power is on, but you have no video--in this case, you will need to remove all the add-on cards and cables first.
- Use the speaker to determine if any beep codes exist. (Refer to Appendix A for details on beep codes.)
- Remove all memory modules and turn on the system. (If the alarm is on, check the specs of the memory, reset the memory or try a different one.)

NOTE

If you are a system integrator, VAR or OEM, a POST diagnostics card is recommended. For I/O port 80h codes, refer to App. B.

Memory Errors

- Make sure that the DIMM modules are properly installed and fully seated in the slots.
- You should be using unbuffered, ECC/Non-ECC DDR2-677/533/400 memory (see the next page). Also, it is recommended that you use the same memory speed for all DIMMs in the system. See Section 2-4 for memory limitations.
- Check for bad DIMM modules or slots by swapping modules between slots and noting the results.
- Check the power supply voltage 115V/230V switch.

Losing the System's Setup Configuration

- Please be sure to use a high quality power supply. A poor quality power supply may cause the system to lose the CMOS setup information. Refer to Section 1-6 for details on recommended power supplies.
- The battery on your motherboard may be old. Check to verify that it still supplies ~3VDC. If it does not, replace it with a new one.
- If the above steps do not fix the Setup Configuration problem, contact your vendor for repairs.

3-2 Technical Support Procedures

Before contacting Technical Support, please make sure that you have followed all the steps listed below. Also, note that as a motherboard manufacturer, Supermicro does not sell directly to end-users, so it is best to first check with your distributor or reseller for troubleshooting services. They should know of any possible problem(s) with the specific system configuration that was sold to you.

1. Please go through the 'Troubleshooting Procedures' and 'Frequently Asked Question' (FAQ) sections in this chapter or see the FAQs on our web site (http://www.supermicro.com/support/faqs/) before contacting Technical Support.
2. BIOS upgrades can be downloaded from our web site at (http://www.supermicro.com/support/bios/).

Note: Not all BIOS can be flashed; some can be flashed, depending on the modifications to the boot block code.

3. If you've followed the instructions above to troubleshoot your system, and still cannot resolve the problem, then please contact Supermicro's technical support and provide them with the following information:

- Motherboard model and PCB revision number
- BIOS release date/version (this can be seen on the initial display when your system first boots up)
- System configuration

An example of a Technical Support form is on our web site at (http://www.supermicro.com/support/contact.cfm).

4. Distributors: For immediate assistance, please have your account number ready when placing a call to our technical support department. We can be reached by e-mail at support@supermicro.com, by phone at:
(408) 503-8000, option 2, or by fax at (408)503-8019.

3-3 Frequently Asked Questions

Question: What type of memory does my motherboard support?

Answer: The PDSMU supports up to 8 GB of **unbuffered**, ECC/Non-ECC DDR2-677/533/400, two-way interleaved or non-interleaved SDRAM. See Section 2-4 for details on installing memory.

Question: How do I update my BIOS?

It is recommended that you **do not** upgrade your BIOS if you are not experiencing any problems with your system. Updated BIOS files are located on our web site at http://www.supermicro.com/support/bios/. Please check our BIOS warning message and the information on how to update your BIOS on our web site. Also, check the current BIOS revision and make sure that it is newer than your BIOS before downloading. Select your motherboard model and download the BIOS file to your computer. Unzip the BIOS files onto a bootable floppy and reboot your system. Follow the Readme.txt to continue flashing the BIOS.

(***Warning**: Do not shut down or reset the system while updating BIOS to prevent possible system boot failure!)

Question: What's on the CD that came with my motherboard?

Answer: The supplied compact disc has quite a few drivers and programs that will greatly enhance your system. We recommend that you review the CD and install the applications you need. Applications on the CD include chipset drivers for Windows, security and audio drivers.

Question: How do I connect the ATA100/66 cable to my IDE device(s)?

Answer: The 80-wire/40-pin high-density ATA100/66 IDE cable that came with your system has two connectors to support two drives. This special cable must be used to take advantage of the speed the ATA100/66 technology offers. **Connect the blue connector to the onboard IDE header and the other connector(s) to your hard drive(s).** Consult the documentation that came with your disk drive for details on actual jumper locations and settings.

3-4 Returning Merchandise for Service

A receipt or copy of your invoice marked with the date of purchase is required before any warranty service will be rendered. You can obtain service by calling your vendor for a Returned Merchandise Authorization (RMA) number. When returning to the manufacturer, the RMA number should be prominently displayed on the outside of the shipping carton, and mailed prepaid or hand-carried. Shipping and handling charges will be applied for all orders that must be mailed when service is complete.

This warranty only covers normal consumer use and does not cover damages incurred in shipping or from failure due to the alteration, misuse, abuse or improper maintenance of products.

During the warranty period, contact your distributor first for any product problems.

Chapter 4
BIOS

4-1 Introduction

This chapter describes the Phoenix BIOS™ Setup utility for the PDSMU. The Phoenix ROM BIOS is stored in a flash chip and can be easily upgraded using a floppy disk-based program.

Note: Due to periodic changes to the BIOS, some settings may have been added or deleted and might not yet be recorded in this manual. Please refer to the Manual Download area of the Supermicro web site <http://www.supermicro.com/support/bios/> for any changes to the BIOS that may not be reflected in this manual.

System BIOS

The BIOS is the Basic Input Output System used in all IBM® PC, XT™, AT®, and PS/2® compatible computers. The Phoenix BIOS utility stores the system parameters, types of disk drives, video displays, etc. in the CMOS. The CMOS memory requires very little electrical power. When the computer is turned off, a backup battery provides power to the CMOS Logic, enabling it to retain system parameters. Each time when the computer is powered on, the computer is configured with the values stored in the CMOS Logic by the system BIOS, which gains control at boot up.

How To Change the Configuration Data

The CMOS information that determines the system parameters may be changed by entering the BIOS Setup utility. This Setup utility can be accessed by pressing the <Delete> key at the appropriate time during system boot. (See below.)

Starting the Setup Utility

Normally, the only visible POST (Power On Self Test) routine is the memory test. As the memory is being tested, press the <Delete> key to enter the main menu of the BIOS Setup utility. From the main menu, you can access the other setup screens, such as the Security and Power menus. Beginning with Section 4-3, detailed descriptions are given for each parameter setting in the Setup utility.

Warning: Do not shut down or reset the system while updating BIOS to prevent possible boot failure.

4-2 Running Setup

Default settings are in bold text unless otherwise noted.

The BIOS setup options described in this section are selected by choosing the appropriate text from the main BIOS Setup screen. All displayed text is described in this section, although the screen display is often all you need to understand how to set the options (See the next page).

When you first power on the computer, the Phoenix BIOS™ is immediately activated.

While the BIOS is in control, the Setup program can be activated in one of two ways:

1. By pressing <Delete> immediately after turning the system on, or
2. When the message shown below appears briefly at the bottom of the screen during the POST (Power On Self-Test), press the <Delete> key to activate the main Setup menu:

Press the <Delete> key to enter Setup

4-3 Main BIOS Setup

All main Setup options are described in this section. The main BIOS Setup screen is displayed below.

Use the Up/Down arrow keys to move among the different settings in each menu. Use the Left/Right arrow keys to change the options for each setting.

Press the <Esc> key to exit the CMOS Setup Menu. The next section describes in detail how to navigate through the menus.

Items that use submenus are indicated with the ▶icon. With the item highlighted, press the <Enter> key to access the submenu.

Main BIOS Setup Menu

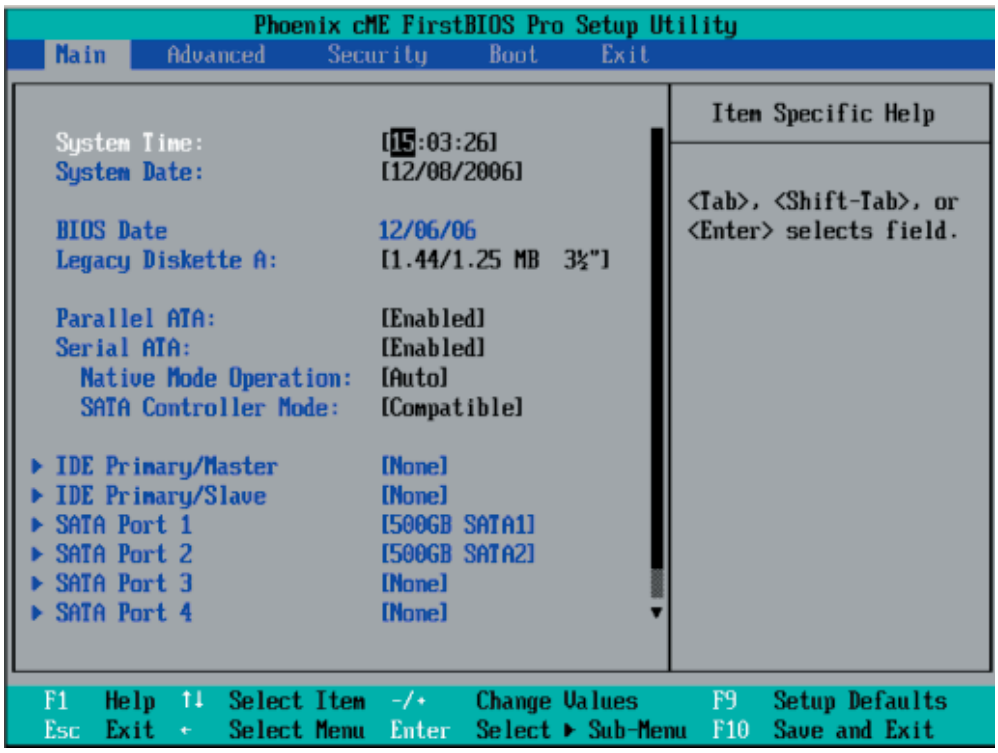

Main Setup Features

System Time

To set the system date and time, key in the correct information in the appropriate fields. Then press the <Enter> key to save the data.

System Date

Using the arrow keys, highlight the month, day and year fields, and enter the correct data. Press the <Enter> key to save the data.

BIOS Date

This field displays the date when this version of BIOS was built.

Legacy Diskette A

This setting allows the user to set the type of floppy disk drive installed as diskette A. The options are Disabled, 360Kb 5.25 in, 1.2MB 5.25 in, 720Kb 3.5 in, **1.44/1.25MB**, 3.5 in and 2.88MB 3.5 in.

Parallel ATA

This setting allows the user to enable or disable the function of Parallel ATA. The options are **Enabled** and Disabled.

Serial ATA

This setting allows the user to enable or disable the function of Serial ATA. The options are Disabled and **Enabled.**

Native Mode Operation

Select the native mode for ATA. The options are: Serial ATA, and **Auto**.

SATA Controller Mode

Select **Compatible** to allow the SATA and PATA drives to be automatically-detected and be placed in the Legacy Mode by the BIOS. Select Enhanced to allow the SATA and PATA drives to be to be automatically-detected and be placed in the Native IDE Mode. (***Note: The Enhanced mode is supported by the Windows 2000 OS or a later version.)**

When the SATA Controller Mode is set to Enhanced, the following items will display:

Serial ATA (SATA) RAID Enable (*Available when the SATA Controller Mode is set to Enhanced.)

Select Enable to enable Serial ATA RAID Functions. (*For the Windows OS environment, use the RAID driver if this feature is set to Enabled. When this item is set to Enabled, the item: "ICH RAID Code Base" will be available for you to select either Intel or Adaptec Host RAID firmware. If this item is set to **Disabled**, the item-SATA AHCI Enable will be available.) The options are Enabled and **Disabled**.

ICH RAID Code Base (*Available when SATA RAID is Enabled.)

Select Intel to enable Intel's SATA RAID firmware. Select Adaptec to use Adaptec's HostRAID firmware. The options are **Intel** and Adaptec**.**

SATA AHCI (*Available when SATA RAID is Disabled.)

Select Enable to enable the function of Serial ATA Advanced Host Interface. (*Take caution when using this function. This feature is for advanced programmers only. The options are Enabled and **Disabled**.)

▶IDE Primary Master/Slave, SATA Port 1, SATA Port 2, SATA Port 3 and SATA Port 4

These settings allow the user to set the parameters of IDE Primary Master/Slave SATA Port 1, SATA Port 2, SATA Port 3 and SATA Port 4 slots. Hit <Enter> to activate the following sub-menu screen for detailed options of these items. Set the correct configurations accordingly. The items included in the sub-menu are:

Type

This feature allows you to select the type of IDE hard drive. Select **Auto** for the BIOS to automatically configure the parameters of the HDD installed at the connection. Enter a number between 1 to 39 to select a predetermined HDD type. Select User to allow the user to enter the parameters of the HDD installed. Select CDROM if a CDROM drive is installed. Select ATAPI if a removable disk drive is installed.

Multi-Sector Transfers

This item allows the user to specify the number of sectors per block to be used in multi-sector transfer. The options are **Disabled**, 4 Sectors, 8 Sectors, and 16 Sectors.

LBA Mode Control

This item determines whether the Phoenix BIOS will access the IDE Channel 0 Master Device via the LBA mode. The options are Enabled and **Disabled.**

32 Bit I/O

This option allows the user to enable or disable the function of 32-bit data transfer. The options are Enabled and **Disabled**.

Transfer Mode

This option allows the user to set the transfer mode. The options are **Standard**, Fast PIO1, Fast PIO2, Fast PIO3, Fast PIO4, FPIO3/DMA1 and FPIO4/DMA2.

Ultra DMA Mode

This option allows the user to select Ultra DMA Mode. The options are **Disabled**, Mode 0, Mode 1, Mode 2, Mode 3, Mode 4, and Mode 5.

System Memory

This display informs you how much system memory is recognized as being present in the system.

Extended Memory

This display informs you how much extended memory is recognized as being present in the system.

4-4 Advanced Setup

Choose Advanced from the Phoenix BIOS Setup Utility main menu with the arrow keys. You should see the following display. The items with a triangle beside them have sub menus that can be accessed by highlighting the item and pressing <Enter>.

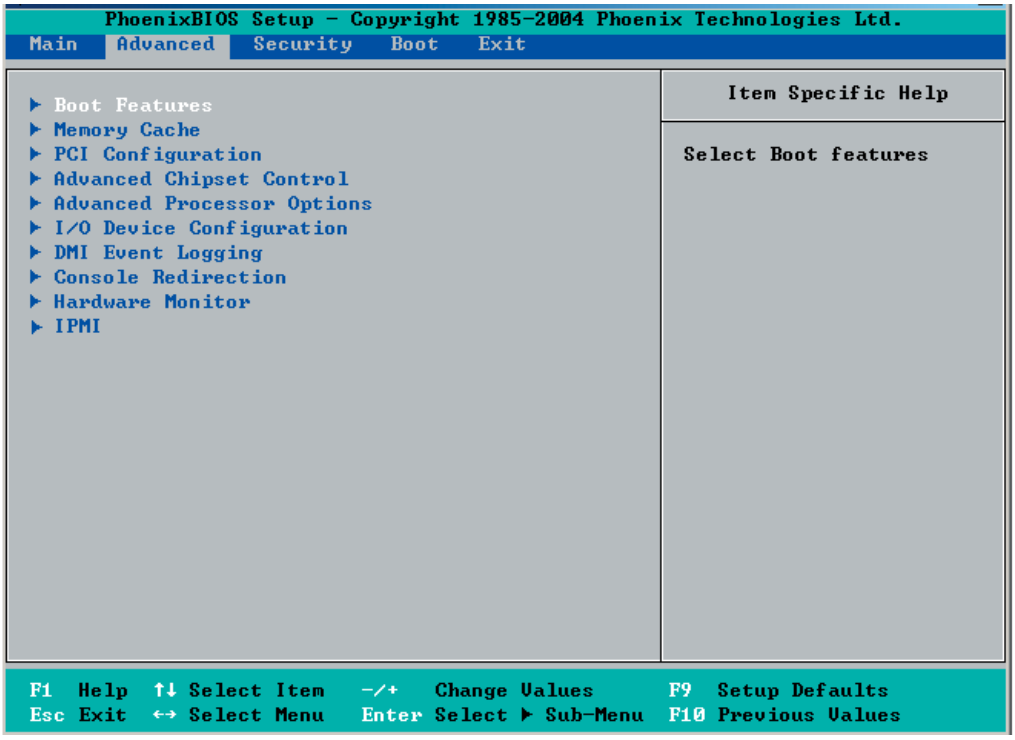

▶Boot Features

Access the submenu to make changes to the following settings.

QuickBoot Mode

If enabled, this feature will speed up the POST (Power On Self Test) routine by skipping certain tests after the computer is turned on. The settings are **Enabled** and Disabled. If Disabled, the POST routine will run at normal speed.

QuietBoot Mode

This setting allows you to **Enable** or Disable the graphic logo screen during boot-up.

ACPI Mode

Use the setting to determine if you want to employ ACPI (Advanced Configuration and Power Interface) power management on your system. The options are **Yes** and No.

Power Button Behavior

If set to **Instant-Off**, the system will power off immediately as soon as the user presses the power button. If set to 4-sec., the system will power off when the user presses the power button for 4 seconds or longer. The options are instant-off and 4-sec override.

Resume On Modem Ring

Select On to “wake your system up” when an incoming call is received by your modem. The options are **On** and Off.

Resume On PME#

Select On to allow your system be woken up when signals are received by the selected PME# of a PCI slot. The options are **On** and Off.

Power Loss Control

This setting allows you to choose how the system will react when power returns after an unexpected loss of power. The options are Stay Off, Power On, and **Last State**.

Watch Dog

If enabled, this option will automatically reset the system if the system is not active for more than 5 minutes. The options are Enabled and **Disabled**.

Summary Screen

This setting allows you to **Enable** or Disable the summary screen which displays the system configuration during bootup.

▶Memory Cache

Cache System BIOS Area

This setting allows you to designate a reserve area in the system memory to be used as a System BIOS buffer to allow the BIOS to write (cache) data into this reserved memory area. Select **Write Protect** to enable this function, and this area will be reserved for BIOS ROM access only. Select Uncached to disable this function and make this area available for other devices.

Cache Video BIOS Area

This setting allows you to designate a reserve area in the system memory to be used as a Video BIOS buffer to allow the BIOS to write (cache) data into this reserved memory area. Select **Write Protect** to enable the function and this area will be reserved for Video BIOS ROM access only. Select Uncached to disable this function and make this area available for other devices.

Cache Base 0-512K

If enabled, this feature will allow the data stored in the base memory area: block 0-512K to be cached (written) into a buffer, a storage area in Static DROM (SDROM) or to be written into L1, L2 cache inside the CPU to speed up CPU operations. Select Uncached to disable this function. Select Write Through to allow data to be cached into the buffer and written into the system memory at the same time.

Select Write Protect to prevent data from being written into the base memory area of Block 0-512K. Select Write Back to allow the CPU to write data back directly from the buffer without writing data to the System Memory for fast CPU data processing and operation. The options are Uncached, Write Through, Write Protect, and **Write Back**.

Cache Base 512K-640K

If enabled, this feature will allow the data stored in the memory area: 512K-640K to be cached (written) into a buffer, a storage area in Static DROM (SDROM) or written into L1, L2, L3 cache inside the CPU to speed up CPU operations. Select Uncached to disable this function. Select Write Through to allow data to be cached into the buffer and written into the system memory at the same time. Select Write Protect to prevent data from being written into the base memory area of Block 512-640K. Select Write Back to allow the CPU to write data back directly from the buffer without writing data to the System Memory for fast CPU data processing and operation. The options are Uncached, Write Through, Write Protect, and **Write Back**.

Cache Extended Memory

If enabled, this feature will allow the data stored in the extended memory area to be cached (written) into a buffer, a storage area in Static DROM (SDROM) or written into L1, L2, L3 cache inside the CPU to speed up CPU operations. Select Uncached to disable this function. Select Write Through to allow data to be cached into the buffer and written into the system memory at the same time. Select Write Protect to prevent data from being written into the extended memory area above 1 MB. Select Write Back to allow the CPU to write data back directly from the buffer without writing data to the System Memory for fast CPU data processing and operation. The options are Uncached, Write Through, Write Protect, and **Write Back**.

Discrete MTRR Allocation

If enabled, MTRRs (-Memory Type Range Registers) are configured as distinct, separate units and cannot be overlapped. Set to Enabled to enhance graphic performance when using a Linux graphic driver that requires write-combining configuration with 4GB or more memory. The options are Enabled and **Disabled**.

▶PCI Configuration

Access the submenu to make changes to the following settings for PCI devices.

Onboard GLAN1/Onboard GLAN2 (Gigabit- LAN) OPROM Configure

Enabling this option provides the capability to boot from the GLAN port specified. The options are **Disabled** and Enabled.

Reset Configuration Data

If set to Yes, this setting clears the Extended System Configuration Data- (ESCD) area. The options are Yes and **No**.

▶Slot1 PCI-Exp. x8, Slot2 PCI-Exp. x8 and Slot3 PCI-Exp. x4

Access the submenu for each of the settings above to make changes to the following:

Option ROM Scan

When enabled, this setting will initialize the device expansion ROM. The options are **Enabled** and Disabled.

Enable Master

This setting allows you to enable the selected device as the PCI bus master. The options are **Enabled** and Disabled.

Latency Timer

This setting allows you to set the clock rate for Bus Master. A high-priority, high-throughout device may benefit from a greater clock rate. The options are **Default**, 0020h, 0040h, 0060h, 0080h, 00A0h, 00C0h, and 00E0h. For Unix, Novell and other Operating Systems, please select the option: other. If a drive fails after the installation of a new software, you might want to change this setting and try again. A different OS requires a different Bus Master clock rate**.**

Large Disk Access Mode

This setting determines how large hard drives are to be accessed. The options are **DOS** or Other (for Unix, Novelle NetWare and other operating systems).

▶Advanced Chipset Control

Access the submenu to make changes to the following settings.

*__Warning__: Take Caution when changing the Advanced settings. Incorrect values entered may cause system malfunction. Also, a very high DRAM frequency or incorrect DRAM timing may cause system instability. When this occurs, revert to the default setting.

Clock Spectrum Feature

If Enabled, the BIOS will monitor the level of Electromagnetic Interference caused by the components and will attempt to decrease the interference whenever needed. The options are Enabled and **Disabled**.

ECC Conditions (***Available when supported by the memory**)

This setting specifies ECC Error conditions that will be treated as ECC Error Events. The options are None, Single Bit, **Multiple Bit,** and Both.

ECC Error Handler (***Available when supported by the memory**)

This setting allows you to select the type of interrupt to be activated when an ECC error occurs. The options are None, NMI (Non-Maskable Interrupt), **SMI** (System Management Interrupt) and SCI (System Control Interrupt.)

USB Function

Select Enabled to activate the USB devices specified. The settings are **Enabled** and Disabled.

Legacy USB Support

This setting allows you to enable support for Legacy USB devices. The settings are **Enabled** and Disabled.

▶Advanced Processor Options

Access the submenu to make changes to the following settings.

CPU Speed

This is a display that indicates the speed of the installed processor.

Frequency Ratio (*Available when supported by the CPU.)

The feature allows the user to set the internal frequency multiplier for the CPU. The options are: **Default** and x12.

Core-Multi-Processing (*Available when supported by the CPU.)

Set to Enabled to use a processor's Second Core and beyond. (Please refer to Intel's web site for more information.) The options are Disabled and **Enabled.**

Machine Checking (*Available when supported by the CPU.)

Set to Enabled to use this function which will allow the CPU to detect and report hardware (machine) errors via a set of model-specific registers (MSRs). The options are Disabled and **Enabled**.

Enhanced Intel EIST Support (*Available when supported by the CPU.)

Select Enabled to use the Enhanced Intel SpeedStep Technology and allows the system to automatically adjust processor voltage and core frequency in an effort to reduce power consumption and heat dissipation. The options are Enabled and **Disabled**. Please refer to Intel's web site for detailed information.

Thermal Management 2 (*Available when supported by the CPU.)

Set to **Enabled** to use Thermal Management 2 (TM2) which will lower the CPU voltage and frequency when the CPU temperature reaches a predefined overheat threshold. Set to Disabled to use Thermal Manager 1 (TM1), allowing CPU clocking to be regulated via CPU Internal Clock modulation when the CPU temperature reaches the overheat threshold.

Adjacent Cache Line Prefetch (*Available when supported by the CPU.)

The CPU fetches the cache line for 64 bytes if this option is set to Disabled. The CPU fetches both cache lines for 128 bytes as comprised if Enabled. The default settings are **Disabled** for the Intel 5100 Series Processors and **Enable** for the 5000 Series Processors.

Set Maximum Extended CPUID=3

Select Enabled to set the Maximum Extended CPUID value to 3. The options are Enabled and **Disabled**.

C1 Enhanced Mode (*Available when supported by the CPU.)

Set to Enabled to enable Enhanced Halt State to lower CPU voltage/frequency to prevent overheat. The options are **Enabled** and Disabled. (***Note:** please refer to Intel's web site for detailed information.)

Intel <R> Virtualization Technology (*Available when supported by the CPU.)

Select Enabled to use the feature of Virtualization Technology to allow one platform to run multiple operating systems and applications in independent partitions, creating multiple "virtual" systems in one physical computer. The options are Enabled and **Disabled**. (***Note**: If there is any change to this setting, you will need to power off and restart the system for the change to take effect.) Please refer to Intel's web site for detailed information.

No Execute Mode Memory Protection (*Available when supported by the CPU.)

Set to Enabled to allow the processor to classify areas in memory where an application code can execute and where it cannot, and thus preventing a worm or a virus from inserting and creating a flood of codes to overwhelm the processor or damage the system during an attack.

(***Note**: this feature is available when your OS and your CPU support the function of Execute Disable Bit.) The options are **Disabled** and Enabled. (**Note**: For more information regarding hardware/software support for this function, please refer to Intel's and Microsoft's web sites.)

▶I/O Device Configuration

Access the submenu to make changes to the following settings.

KBC Clock Input

This setting allows you to select clock frequency for KBC. The options are 6MHz, 8MHz, **12MHz,** and 16MHz.

Serial Port A

This setting allows you to assign control of serial port A. The options are **Enabled** (user defined), Disabled, and Auto (BIOS- or OS- controlled).

Base I/O Address

This setting allows you to select the base I/O address for serial port A. The options are **3F8**, 2F8, 3E8, and 2E8.

Interrupt

This setting allows you to select the IRQ (interrupt request) for serial port A. The options are IRQ3 and **IRQ4**.

Serial Port B

This setting allows you to assign control of serial port B. The options are **Enabled** (user defined), Disabled, Auto (BIOS controlled) and OS Controlled.

Mode

This setting allows you to set the type of device that will be connected to serial port B. The options are **Normal** and IR (for an infrared device).

Base I/O Address

This setting allows you to select the base I/O address for serial port B. The options are 3F8, **2F8**, 3E8 and 2E8.

Interrupt

This setting allows you to select the IRQ (interrupt request) for serial port B. The options are **IRQ3** and IRQ4.

Floppy Disk Controller

This setting allows you to assign control of the floppy disk controller. The options are **Enabled** (user defined), Disabled, and Auto (BIOS and OS controlled).

Base I/O Address

This setting allows you to select the base I/O address for the Floppy port. The options are **Primary** and Secondary.

▶DMI Event Logging

Access the submenu to make changes to the following settings.

Event Log Validity

This is a display to inform you of the event log validity. It is not a setting.

Event Log Capacity

This is a display to inform you of the event log capacity. It is not a setting.

View DMI Event Log

Highlight this item and press <Enter> to view the contents of the event log.

Event Logging

This setting allows you to **Enable** or Disable event logging.

ECC Event Logging

This setting allows you to **Enable** or Disable ECC event logging.

Mark DMI Events as Read

Highlight this item and press <Enter> to mark the DMI events as read.

Clear All DMI Event Logs

Select Yes and press <Enter> to clear all DMI event logs. The options are Yes and **No**.

▶Console Redirection

Access the submenu to make changes to the following settings.

COM Port Address

This item allows you to specify which COM port to direct the remote console to: Onboard COM A or Onboard COM B. This setting can also be **Disabled**.

BAUD Rate

This item allows you to set the BAUD rate for console redirection. The options are 300, 1200, 2400, 9600, **19.2K**, 38.4K, 57.6K, and 115.2K.

Console Type

This item allows you to set console redirection type. The options are VT100, VT100,8bit, PC-ANSI, 7bit, **PC ANSI**, VT100+, VT-UTF8 and ASCII.

Flow Control

This item allows you to select the flow control option for console redirection. The options are: None, XON/XOFF, and **CTS/RTS**.

Console Connection

This item allows you to decide how console redirection is to be connected: either **Direct** or Via Modem.

Continue CR after POST

Choose whether to continue with console redirection after the POST routine. The options are On and **Off**.

▶Hardware Monitor Logic

***Note: The Phoenix BIOS will automatically detect the type of CPU(s) and hardware monitoring chip used on the motherboard and will display the Hardware Monitoring Screen accordingly.**

CPU Temperature Threshold

This option allows the user to set a CPU temperature threshold that will activate the alarm system when the CPU temperature reaches this pre-set temperature threshold. The options are 75°C, **80°C**, 85°C and 90°C. (*See below)

Highlight this and hit <Enter> to see monitor data for the following items:

CPU Temperature/CPU Second Core Temperature

System Temperature

Fan1-Fan6 Speeds: If the feature of Auto Fan Control is enabled, the BIOS will automatically display the status of the fans indicated in this item.

Fan Speed Control Modes

This feature allows the user to decide how the system controls the speeds of the onboard fans. The CPU temperature and the fan speed are correlative. When the CPU on-die temperature increases, the fan speed will also increase, and vice versa. When this option is to 3-pin fan, the fan speed will be controlled by voltage. Select "Disable" to disable the fan speed control function and allow the onboard fans to constantly run at full speed (12V). If the option is set to 4-pin, the fan speed will be controlled by Pulse Width Modulation (PWM). Select 3-pin if your chassis came with 3-pin fan headers. Select 4-pin if your chassis came with 4-pin fan headers. Select Workstation if your system is used as a Workstation. Select Server if your system is used as a Server. Select Disable to disable fan speed control and allow the onboard fans to constantly run at full speed (12V). The Options are: **1. Disable**, 2. 3-pin (Server), 3. 3-pin (Workstation), 4. 4-pin (Server) and 5. 4-pin (Workstation).

Voltage Monitoring

The following items will be monitored and displayed:

Vcore /Vcc 1.5V
-12/+12V
Vcc 1.8V
+3.3V
5Vsb/5VDD
Vfsb/Vbat

Note: In the Windows OS environment, the Supero Doctor III settings take precedence over the BIOS settings. When first installed, Supero Doctor III adopts the temperature threshold settings previously set in the BIOS. Any subsequent changes to these thresholds must be made within Supero Doctor, since the SD III settings override the BIOS settings. For the Windows OS to adopt the BIOS temperature threshold settings, please change the SDIII settings to be the same as those set in the BIOS.

4-5 Security

Choose Security from the Phoenix BIOS Setup Utility main menu with the arrow keys. You should see the following display. Security setting options are displayed by highlighting the setting using the arrow keys and pressing <Enter>. All Security BIOS settings are described in this section.

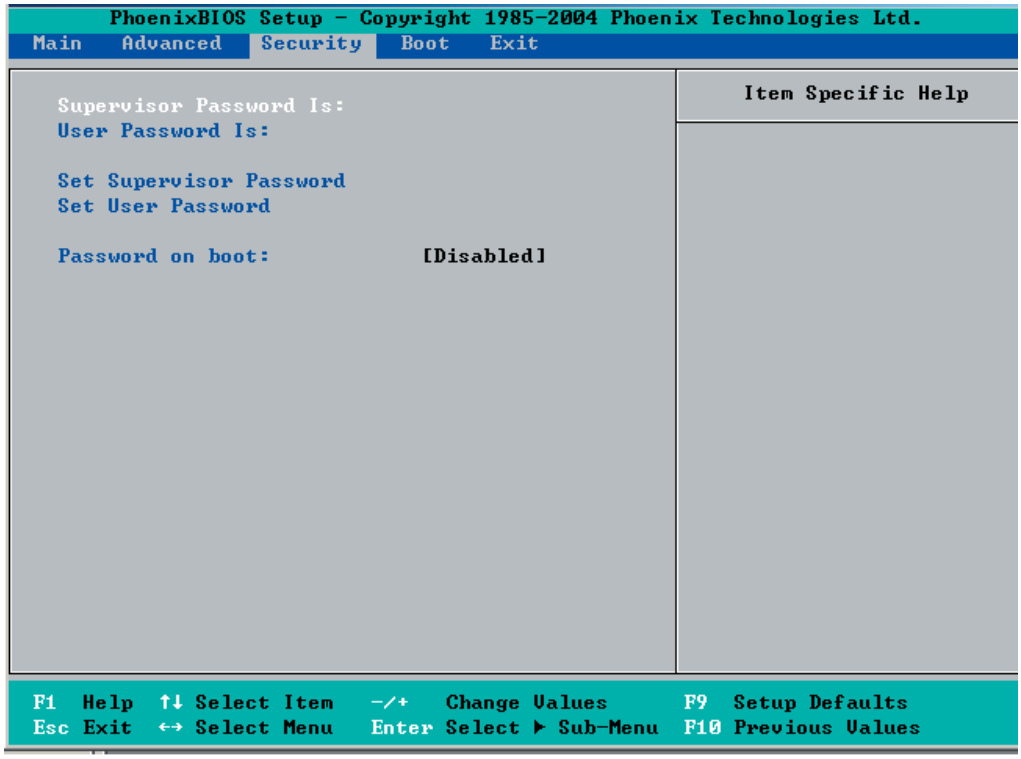

Supervisor Password Is:

This item indicates if a supervisor password has been entered to the system. Clear means such a password has not been used, and Set means a supervisor password has been entered.

User Password Is:

This item indicates if a user password has been entered to the system. Clear means such a password has not been used, and Set means a user password has been entered.

Set Supervisor Password

When the item Set "Supervisor Password" is highlighted, press <Enter>. When prompted, type the Supervisor's password in the dialogue box to set or to change supervisor's password, which allows access to the BIOS.

Set User Password

When the item-Set User Password is highlighted, press <Enter>. When prompted, type the user's password in the dialogue box to set or to change the user's password, which allows access to the system at boot-up.

Password on Boot

This setting allows you to decide if a password is required for a user to access the system at the boot-up. The options are **Enabled** (password required) and Disabled (password not required).

4-6 Boot

Choose Boot from the Phoenix BIOS Setup Utility main menu with the arrow keys. You should see the following display. See details on changing boot priority and devices in Specific Help Windows. All Boot BIOS settings are described in this section.

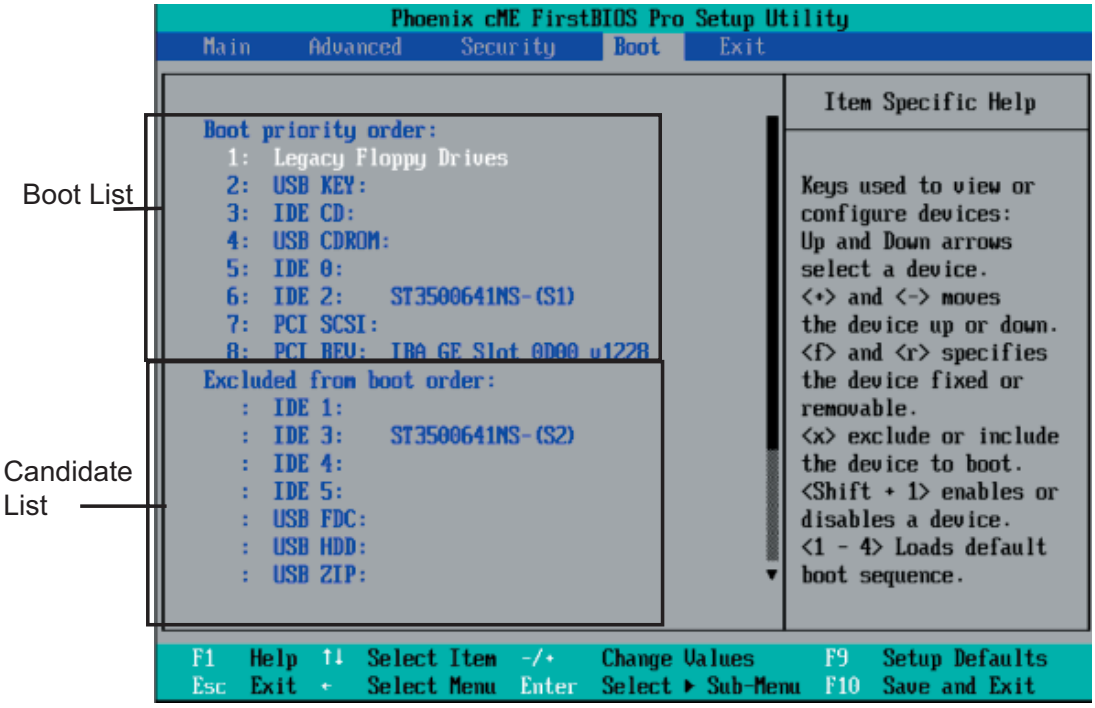

Boot Priority Order/Excluded from Boot Orders

The devices included in the boot list section (above) are bootable devices listed in the sequence of boot order as specified. The boot functions for the devices included in the candidate list (above) are currently disabled. Use a <+> key or a <-> key to move the device up or down. Use the <f> key or the <r> key to specify the type of an USB device, either fixed or removable. You can select one item from the boot list and hit the <x> key to remove it from the list of bootable devices (to make its resource available for other bootable devices). Subsequently, you can select an item from the candidate list and hit the <x> key to remove it from the candidate list and put it in the boot list. This item will then become a bootable device. See details on changing the boot priority order of a device in the "Item Specific Help" window.

4-7 Exit

Choose Exit from the Phoenix BIOS Setup Utility main menu with the arrow keys. You should see the following display. All Exit BIOS settings are described in this section.

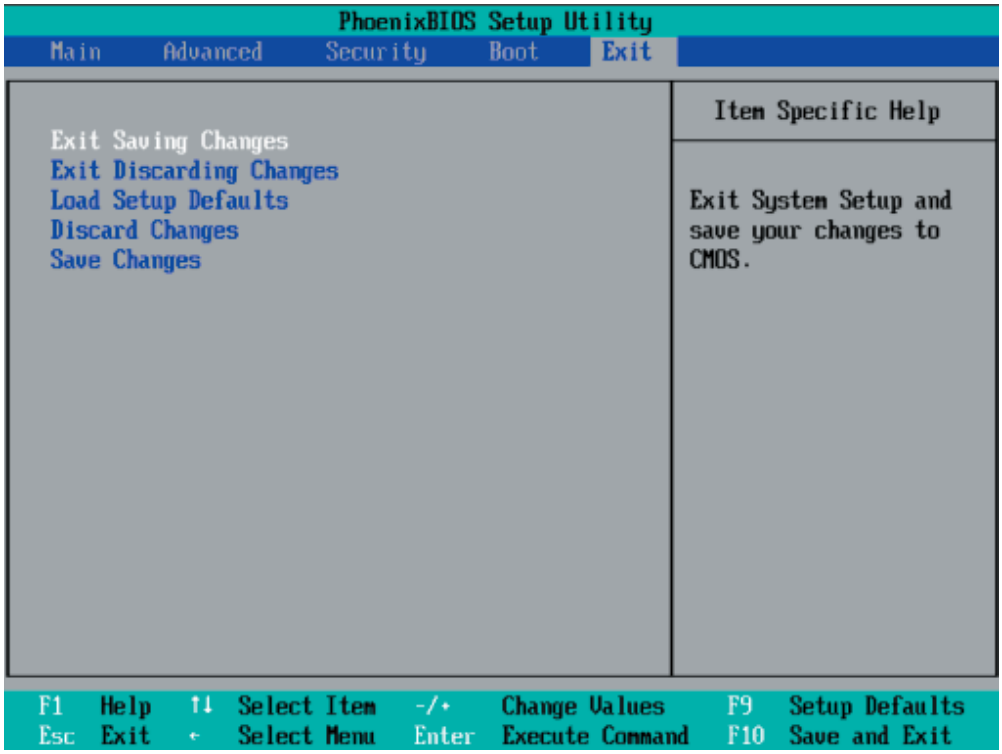

Exit Saving Changes

Highlight this item and press <Enter> to save any changes you've made and to exit the BIOS Setup utility.

Exit Discarding Changes

Highlight this item and press <Enter> to exit the BIOS Setup utility without saving any changes you may have made.

Load Setup Defaults

Highlight this item and press <Enter> to load the default settings for all items in the BIOS Setup. These are the safest settings to use.

Discard Changes

Highlight this item and press <Enter> to discard (cancel) any changes you've made. You will remain in the Setup utility.

Save Changes

Highlight this item and press <Enter> to save any changes you've made. You will remain in the Setup utility.

Appendix A
BIOS POST Messages

During the Power-On Self-Test (POST), the BIOS will check for problems. If a problem is found, the BIOS will activate an alarm or display a message. The following is a list of such BIOS messages.

Failure Fixed Disk
Fixed disk is not working or not configured properly. Check to see if fixed disk is attached properly. Run Setup. Find out if the fixed-disk type is correctly identified.

Stuck key
Stuck key on keyboard.

Keyboard error
Keyboard not working.

Keyboard Controller Failed
Keyboard controller failed test. May require replacing keyboard controller.

Keyboard locked - Unlock key switch
Unlock the system to proceed.

Monitor type does not match CMOS - Run SETUP
Monitor type not correctly identified in Setup

Shadow Ram Failed at offset: nnnn
Shadow RAM failed at offset **nnnn** of the 64k block at which the error was detected.

System RAM Failed at offset: nnnn
System RAM failed at offset **nnnn** of in the 64k block at which the error was detected.

Extended RAM Failed at offset: nnnn Extended memory not working or not configured properly at offset **nnnn.**

System battery is dead - Replace and run SETUP
The CMOS clock battery indicator shows the battery is dead. Replace the battery and run Setup to reconfigure the system.

System CMOS checksum bad - Default configuration used
System CMOS has been corrupted or modified incorrectly, perhaps by an application program that changes data stored in CMOS. The BIOS installed Default Setup Values. If you do not want these values, enter Setup and enter your own values. If the error persists, check the system battery or contact your dealer.

System timer error
The timer test failed. Requires repair of system board.

Real time clock error
Real-Time Clock fails BIOS hardware test. May require board repair.

Check date and time settings
BIOS found date or time out of range and reset the Real-Time Clock. May require setting legal date (1991-2099).

Previous boot incomplete - Default configuration used
Previous POST did not complete successfully. POST loads default values and offers to run Setup. If the failure was caused by incorrect values and they are not corrected, the next boot will likely fail. On systems with control of **wait states**, improper Setup settings can also terminate POST and cause this error on the next boot. Run Setup and verify that the waitstate configuration is correct. This error is cleared the next time the system is booted.

Memory Size found by POST differed from CMOS
Memory size found by POST differed from CMOS.

Diskette drive A error
Diskette drive B error
Drive A: or B: is present but fails the BIOS POST diskette tests. Check to see that the drive is defined with the proper diskette type in Setup and that the diskette drive is attached correctly.

Incorrect Drive A type - run SETUP
Type of floppy drive A: not correctly identified in Setup.

Incorrect Drive B type - run SETUP
Type of floppy drive B: not correctly identified in Setup.

System cache error - Cache disabled
RAM cache failed and BIOS disabled the cache. On older boards, check the cache jumpers. You may have to replace the cache. See your dealer. A disabled cache slows system performance considerably.

CPU ID:
CPU socket number for Multi-Processor error.

EISA CMOS not writeable
ServerBIOS2 test error: Cannot write to EISA CMOS.

DMA Test Failed
ServerBIOS2 test error: Cannot write to extended **DMA** (Direct Memory Access) registers.

Software NMI Failed
ServerBIOS2 test error: Cannot generate software NMI (Non-Maskable Interrupt).

Fail-Safe Timer NMI Failed
ServerBIOS2 test error: Fail-Safe Timer takes too long.

Device Address Conflict
Address conflict for specified **device.**

Allocation Error for: device
Run ISA or EISA Configuration Utility to resolve resource conflict for the specified **device**.

CD ROM Drive
CD ROM Drive identified.

Entering SETUP ...
Starting Setup program

Failing Bits: nnnn
The hex number **nnnn** is a map of the bits at the RAM address which failed the memory test. Each 1 (one) in the map indicates a failed bit. See errors 230, 231, or 232 above for offset address of the failure in System, Extended, or Shadow memory.

Fixed Disk n
Fixed disk **n** (0-3) identified.

Invalid System Configuration Data
Problem with NVRAM (CMOS) data.

I/O device IRQ conflict
I/O device IRQ conflict error.

PS/2 Mouse Boot Summary Screen:
PS/2 Mouse installed.

nnnn kB Extended RAM Passed
Where **nnnn** is the amount of RAM in kilobytes successfully tested.

nnnn Cache SRAM Passed
Where **nnnn** is the amount of system cache in kilobytes successfully tested.

nnnn kB Shadow RAM Passed
Where **nnnn** is the amount of shadow RAM in kilobytes successfully tested.

nnnn kB System RAM Passed
Where **nnnn** is the amount of system RAM in kilobytes successfully tested.

One or more I2O Block Storage Devices were excluded from the Setup Boot Menu
There was not enough room in the IPL table to display all installed I2O block-storage devices.

Operating system not found
Operating system cannot be located on either drive A: or drive C:. Enter Setup and see if fixed disk and drive A: are properly identified.

Parity Check 1 nnnn
Parity error found in the system bus. BIOS attempts to locate the address and display it on the screen. If it cannot locate the address, it displays **????.** Parity is a method for checking errors in binary data. A parity error indicates that some data has been corrupted.

Parity Check 2 nnnn
Parity error found in the I/O bus. BIOS attempts to locate the address and display it on the screen. If it cannot locate the address, it displays **????.**

Press <F1> to resume, <F2> to Setup, <F3> for previous
Displayed after any recoverable error message. Press <F1> to start the boot process or <F2> to enter Setup and change the settings. Press <F3> to display the previous screen (usually an initialization error of an **Option ROM**, i.e., an add-on card). Write down and follow the information shown on the screen.

Press <F2> to enter Setup
Optional message displayed during POST. Can be turned off in Setup.

PS/2 Mouse:
PS/2 mouse identified.

Run the I2O Configuration Utility
One or more unclaimed block storage devices have the Configuration Request bit set in the LCT. Run an I2O Configuration Utility (e.g. the SAC utility).

System BIOS shadowed
System BIOS copied to shadow RAM.

UMB upper limit segment address: *nnnn*
Displays the address ***nnnn*** of the upper limit of **Upper Memory Blocks**, indicating released segments of the BIOS which can be reclaimed by a virtual memory manager.

Video BIOS shadowed
Video BIOS successfully copied to shadow RAM.

Notes

Appendix B
BIOS POST Codes

This section lists the POST (Power On Self Test) codes for the Phoenix BIOS. POST codes are divided into two categories: recoverable and terminal.

Recoverable POST Errors

When a recoverable type of error occurs during POST, the BIOS will display an POST code that describes the problem. BIOS may also issue one of the following beep codes:

1 long and two short beeps - video configuration error
1 repetitive long beep - no memory detected

Terminal POST Errors

If a terminal type of error occurs, BIOS will shut down the system. Before doing so, BIOS will write the error to port 80h, attempt to initialize video and write the error in the top left corner of the screen. The following is a list of codes that may be written to port 80h.

POST Code	Description
01h	IPMI Initialization
02h	Verify Real Mode
03h	Disable Non-Maskable Interrupt (NMI)
04h	Get CPU type
06h	Initialize system hardware
07h	Disable shadow and execute code from the ROM.
08h	Initialize chipset with initial POST values
09h	Set IN POST flag
0Ah	Initialize CPU registers
0Bh	Enable CPU cache
0Ch	Initialize caches to initial POST values
0Eh	Initialize I/O component
0Fh	Initialize the local bus IDE
10h	Initialize Power Management
11h	Load alternate registers with initial POST values
12h	Restore CPU control word during warm boot
13h	Reset PCI Bus Mastering devices
14h	Initialize keyboard controller
16h	1-2-2-3 BIOS ROM checksum
17h	Initialize cache before memory Auto size

POST Code	Description
18h	8254 timer initialization
1Ah	8237 DMA controller initialization
1Ch	Reset Programmable Interrupt Controller
20h	1-3-1-1 Test DRAM refresh
22h	1-3-1-3 Test 8742 Keyboard Controller
24h	Set ES segment register to 4 GB
28h	Auto size DRAM
29h	Initialize POST Memory Manager
2Ah	Clear 512 kB base RAM
2Ch	1-3-4-1 RAM failure on address line ***xxxx****
2Eh	1-3-4-3 RAM failure on data bits ***xxxx**** of low byte of memory bus
2Fh	Enable cache before system BIOS shadow
32h	Test CPU bus-clock frequency
33h	Initialize Phoenix Dispatch Manager
36h	Warm start shut down
38h	Shadow system BIOS ROM
3Ah	Auto size cache
3Ch	Advanced configuration of chipset registers
3Dh	Load alternate registers with CMOS values
41h	Initialize extended memory for RomPilot (optional)
42h	Initialize interrupt vectors
45h	POST device initialization
46h	2-1-2-3 Check ROM copyright notice
48h	Check video configuration against CMOS
49h	Initialize PCI bus and devices
4Ah	Initialize all video adapters in system
4Bh	QuietBoot start (optional)
4Ch	Shadow video BIOS ROM
4Eh	Display BIOS copyright notice
4Fh	Initialize MultiBoot
50h	Display CPU type and speed
51h	Initialize EISA board (optional)
52h	Test keyboard
54h	Set key click if enabled
55h	Enable USB devices
58h	2-2-3-1 Test for unexpected interrupts
59h	Initialize POST display service
5Ah	Display prompt “Press <ESC> to enter SETUP”
5Bh	Disable CPU cache

POST Code	Description
5Ch	Test RAM between 512 and 640 kB
60h	Test extended memory
62h	Test extended memory address lines
64h	Jump to UserPatch1
66h	Configure advanced cache registers
67h	Initialize Multi Processor APIC
68h	Enable external and CPU caches
69h	Setup System Management Mode (SMM) area
6Ah	Display external L2 cache size
6Bh	Load custom defaults (optional)
6Ch	Display shadow-area message
70h	Display error messages
72h	Check for configuration errors
76h	Check for keyboard errors
7Ch	Set up hardware interrupt vectors
7Dh	Initialize Intelligent System Monitoring (optional)
7Eh	Initialize coprocessor if present
80h	Disable onboard Super I/O ports and IRQs (optional)
81h	Late POST device initialization
82h	Detect and install external RS232 ports
83h	Configure non-MCD IDE controllers
84h	Detect and install external parallel ports
85h	Initialize PC-compatible PnP ISA devices
86h	Re-initialize onboard I/O ports.
87h	Configure Motherboard Configurable Devices (optional)
88h	Initialize BIOS Data Area
89h	Enable Non-Maskable Interrupts (NMIs)
8Ah	Initialize Extended BIOS Data Area
8Bh	Test and initialize PS/2 mouse
8Ch	Initialize floppy controller
8Fh	Determine number of ATA drives (optional)
90h	Initialize hard-disk controllers
91h	Initialize local-bus hard-disk controllers
92h	Jump to UserPatch2
93h	Build MPTABLE for multi-processor boards
95h	Install CD ROM for boot
96h	Clear huge ES segment register
97h	Fix up Multi Processor table
98h	1-2 Search for option ROMs and shadow if successful. One long, two short beeps on checksum failure

POST Code	Description
99h	Check for SMART Drive (optional)
9Ch	Set up Power Management
9Dh	Initialize security engine (optional)
9Eh	Enable hardware interrupts
9Fh	Determine number of ATA and SCSI drives
A0h	Set time of day
A2h	Check key lock
A4h	Initialize typematic rate
A8h	Erase <ESC> prompt
AAh	Scan for <ESC> key stroke
ACh	Enter SETUP
AEh	Clear Boot flag
B0h	Check for errors
B1h	Inform RomPilot about the end of POST (optional)
B2h	POST done - prepare to boot operating system
B4h	1 One short beep before boot
B5h	Terminate QuietBoot (optional)
B6h	Check password (optional)
B7h	Initialize ACPI BIOS and PPM Structures
B9h	Prepare Boot
BAh	Initialize SMBIOS
BCh	Clear parity checkers
BDh	Display MultiBoot menu
BEh	Clear screen (optional)
BFh	Check virus and backup reminders
C0h	Try to boot with INT 19
C1h	Initialize POST Error Manager (PEM)
C2h	Initialize error logging
C3h	Initialize error display function
C4h	Initialize system error flags
C6h	Console redirection init.
C7h	Unhook INT 10h if console redirection enabled
C8h	Force check (optional)
C9h	Extended ROM checksum (optional)
CDh	Reclaim console redirection vector

POST Code	Description
D2h	Unknown interrupt
D4h	Check Intel Branding string
D8h	Alert Standard Format initialization
D9h	Late init for IPMI
DEh	Log error if micro-code not updated properly

The following are for boot block in Flash ROM

POST Code	Description
E0h	Initialize the chipset
E1h	Initialize the bridge
E2h	Initialize the CPU
E3h	Initialize system timer
E4h	Initialize system I/O
E5h	Check force recovery boot
E6h	Checksum BIOS ROM
E7h	Go to BIOS
E8h	Set Huge Segment
E9h	Initialize Multi Processor
EAh	Initialize OEM special code
EBh	Initialize PIC and DMA
ECh	Initialize Memory type
EDh	Initialize Memory size
EEh	Shadow Boot Block
EFh	System memory test
F0h	Initialize interrupt vectors
F1h	Initialize Run Time Clock
F2h	Initialize video
F3h	Initialize System Management Manager
F4h	Output one beep
F5h	Clear Huge Segment
F6h	Boot to Mini DOS
F7h	Boot to Full DOS

*If the BIOS detects errors on 2C, 2E, or 30 (base 512K RAM error), it displays an additional word-bitmap (***xxxx***) indicating the address line or bits that have failed. For example, “2C 0002” means address line 1 (bit one set) has failed. “2E 1020" means data bits 12 and 5 (bits 12 and 5 set) have failed in the lower 16 bits. The BIOS also sends the bitmap to the port-80 LED display. It first displays the checkpoint code, followed by a delay, the high-order byte, another delay, and then the loworder byte of the error. It repeats this sequence continuously.

Notes

Appendix C
Intel HostRAID Installation Instructions

After all the hardware has been installed, you must first configure Intel's ICH7R SATA RAID* before you install the Windows Operating System and other software drivers.

Important Notes to the User:

***Note 1**: If you do not wish to configure onboard SATA RAID functions, please go directly to Section C-2 for Operating System & Other Software Installation.

***Note 2**: This chapter describes RAID Configuration Instructions for the Intel ICH RAID Controller designed for the Windows OS. For the Linux OS, please use the Adaptec HostRAID Utility.

***Note 3**: To use the Adaptec HostRAID, please enable Adaptec's RAID Controller in the BIOS and refer to the Adaptec HostRAID Utility and documentation included in the CD that came with your motherboard for Adaptec RAID Configuration Instructions.

C-1 Introduction to Serial ATA and Parallel ATA

To configure the SATA RAID functions, you must first use the Intel ICH7R SATA RAID Utility program to configure the RAID Level that you desire before installing the Windows XP/2000/2003 Operating System and other software drivers. (The necessary drivers are all included on the Supermicro CD that came with your motherboard.) Note that the current version of the ICH7R SATA RAID Utility can only support Windows XP/2000/2003 Operating Systems.

Serial ATA (SATA)

Serial ATA (SATA) is a physical storage interface that uses a single cable with a minimum of four wires to create a point-to-point connection between devices. It is a serial link, which supports transfer rates up to 3Gbps. Because the serial cables used in SATA are thinner than the traditional cables used in Parallel ATA (PATA), SATA systems have better airflow and can be installed in smaller chassis than Parallel ATA. In addition, the cables used in PATA are limited to a length of 40cm, while Serial ATA cables can be up to one meter in length. Overall, SATA provides better functionality than PATA.

Introduction to Intel ICH7R Serial RAID

Located in the South Bridge of the Intel 3010 chipset, the I/O Controller Hub (ICH7R) provides the I/O subsystem with access to the rest of the system. It supports a 2-channel UltraATA/100 Bus Master IDE controller (PATA) and four Serial ATA (SATA) ports. The ICH7R supports the following PATA and SATA device configurations: Legacy mode and Native mode.

RAID Configurations

The following types of RAID configurations are supported:

RAID 0 (Data Striping): this writes data in parallel, interleaved ("striped") sections of two hard drives. Data transfer rate is doubled over using a single disk.

RAID1 (Data Mirroring): an identical data image from one drive is copied to another drive. The second drive must be the same size or larger than the first drive.

RAID 10 (Striping & Mirroring): RAID 0 and 1 schemes are combined (without parity information) to get the benefits of both.

RAID 5: both data and parity information are striped and mirrored across three or more hard drives.

Intel Matrix Storage

The Intel Matrix Storage, supported by the ICH7R, allows the user to create RAID 0 and RAID1 set by using only two identical hard disk drives. The Intel Matrix Storage Technology creates two partitions on each hard disk drive and generate a virtual RAID0 and RAID1 sets. It also allows you the change the HDD partition size without any data.

Configuring BIOS settings for SATA RAID Functions (Native Mode)

1. Press the <Del> key during system bootup to enter the BIOS Setup Utility.

Note: If it is the first time powering on the system, we recommend that you load the Optimized Default Settings. If you have already done so, please skip to Step 3.

2. Use the arrow keys to select the "Exit" Settings. Once in the "Exit" settings, Scroll down to select "Load Optimized Default Settings" and press the <Enter> key. Select "OK" to confirm the selection. Press the <Enter> key to load the default settings for the BIOS.

3. Use the arrow keys to select the "Main" section in BIOS.

4. Scroll down to "SATA Control Mode" and press the <Enter> key to select "Enhanced"

5. Scroll down to "SATA RAID Enabled" and press <Enter>. Then, select "Enabled."
6. Scroll down to "Exit". Select "Exit Saving Changes" from the "Exit" menu. Press the <Enter> key to save the changes and exit the BIOS.

7. Once you've exited the BIOS Utility, the system will re-boot.

8. During the system boot-up, press the <Ctrl> and <I> keys simultaneously to run the Intel RAID Configuration Utility when prompted by the following message: *Press <Ctrl> <I> for* Intel *RAID Configuration Utility*.

Using the Intel ICH7R SATA RAID Utility Program

1. Creating, Deleting and Resetting RAID Volumes:

a. After the system exits from the BIOS Setup Utility, the system will automatically reboot. The following screen appears after Power-On Self Test.

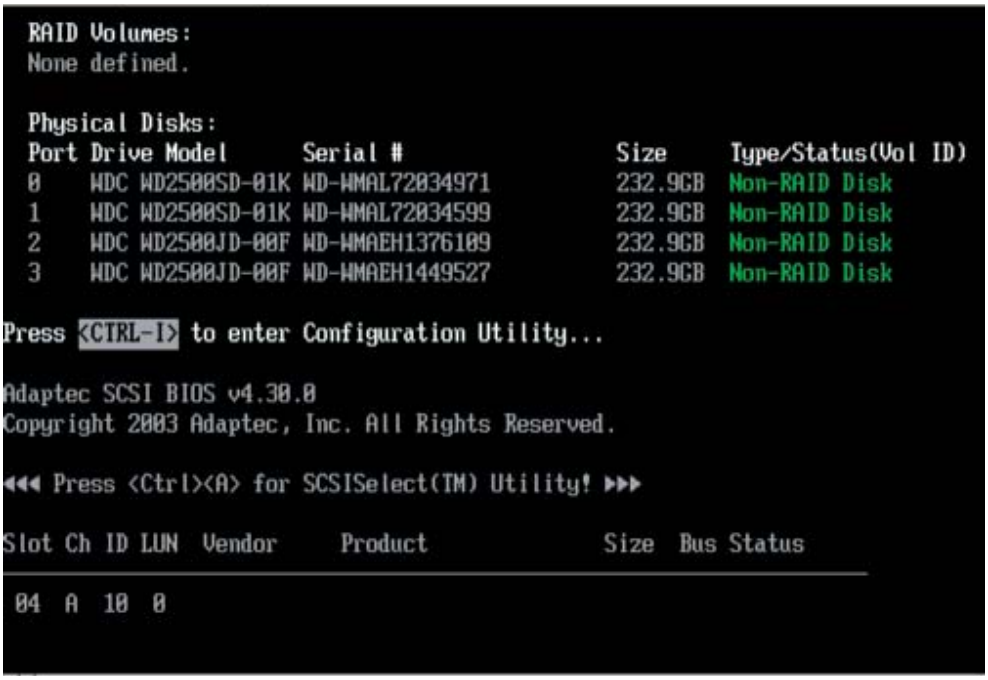

b. When you see the above screen, press the <Ctrl> and the <I> keys simultaneously to have the main menu of the SATA RAID Utility appear:

*Note: All graphics and screen shots shown in the manual are for reference only. The screen shots shown in the manual do not imply Supernicro's endorsement or non-endorsement on any 3rd party's product. Your screens may or many not look exactly the same as the graphics shown in this manual.

Creating a RAID 0 Volume:

a. Select "Create RAID Volume" from the main menu and press the <Enter> key. The following screen will appear:

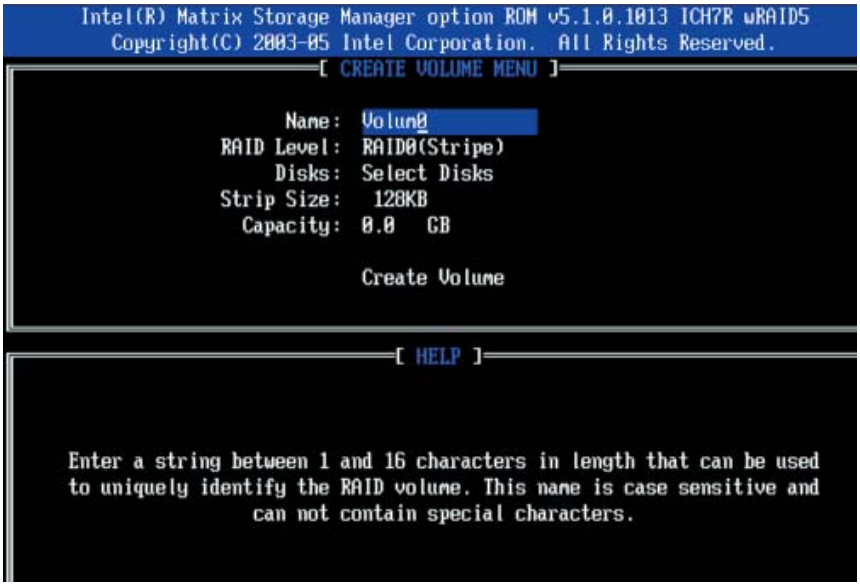

b. Specify a name for the RAID 0 set and press the <Tab> key or the <Enter> key to go to the next field. (You can use the <Esc> key to select the previous menu.)

c. When RAID Level item is highlighted, press the <Up Arrow>, <Down Arrow> keys to select RAID 0 (Stripe) and hit <Enter>.

d. When the Disks item is highlighted, press <Enter> to select the HDD to configure as RAID. The following pop-up screen (*See the note on Page C-3) displays:

e. Use the <Up Arrow>, <Down Arrow> keys to highlight a drive and press <Space> to select it. A triangle appears to confirm the selection of the drive.

f. Use the <Up Arrow>, <Down Arrow> keys to select the stripe size, ranging from 4 KB to 128 KB for the RAID 0 array, and hit <Enter>. (***Note**: For a server, please use a lower stripe size, and for a multimedia system, use a higher stripe size. The default stripe size is 128 KB.)

g. Press <Enter> when the Create Volume item is highlighted. A warning message displays.

h. When asked "Are you sure you want to create this volume (Y/N), press "Y" to create the RAID volume, or type "N" to go back to the Create Volume menu.

Creating a RAID 1 Volume:

a. Select "Create RAID Volume" from the main menu and press the <Enter> key. The following screen will appear:

b. Specify a name for the RAID 1 set and press the <Tab> key or the <Enter> key to go to the next field. (You can use the <Esc> key to select the previous menu.)

c. When RAID Level item is highlighted, press the <Up Arrow>, <Down Arrow> keys to select RAID 1 (Mirror) and hit <Enter>.

d. When the Capacity item is highlighted, enter your RAID volume capacity and hit <Enter>. The default setting is the maximum capacity allowed.

e. Press <Enter> when the Create Volume item is highlighted. A warning message displays.

f. When asked "Are you sure you want to create this volume (Y/N), press "Y" to create the RAID volume, or type "N" to go back to the Create Volume menu.

Creating a RAID 10 (RAID 1+ RAID 0):

a. Select "Create RAID Volume" from the main menu and press the <Enter> key. The following screen will appear:

b. Specify a name for the RAID 10 set and press <Enter>.

c. When RAID Level item is highlighted, use the <Up Arrow>, <Down Arrow> keys to select RAID 10 (RAID1 + RAID0) and hit <Enter>.

d. When the Stripe Size is highlighted, use the <Up Arrow>, <Down Arrow> keys to select the stripe size from 4 KB to 128 KB for your RAID 10 and hit <Enter>. The default setting is 6 4KB. (***Note**: For a server, please use a lower stripe size, and for a multimedia system, use a higher stripe size.)

e. When the RAID Volume Capacity item is highlighted, enter your RAID volume capacity and hit <Enter>. The default setting is the maximum capacity allowed.

f. Press <Enter> when the Create Volume item is highlighted. A warning message displays.

g. When asked "Are you sure you want to create this volume (Y/N), press "Y" to create the RAID volume, or type "N" to go back to the Create Volume menu.

Creating a RAID 5 Set (Parity):

a. Select "Create RAID Volume" from the main menu and press the <Enter> key. The following screen will appear:

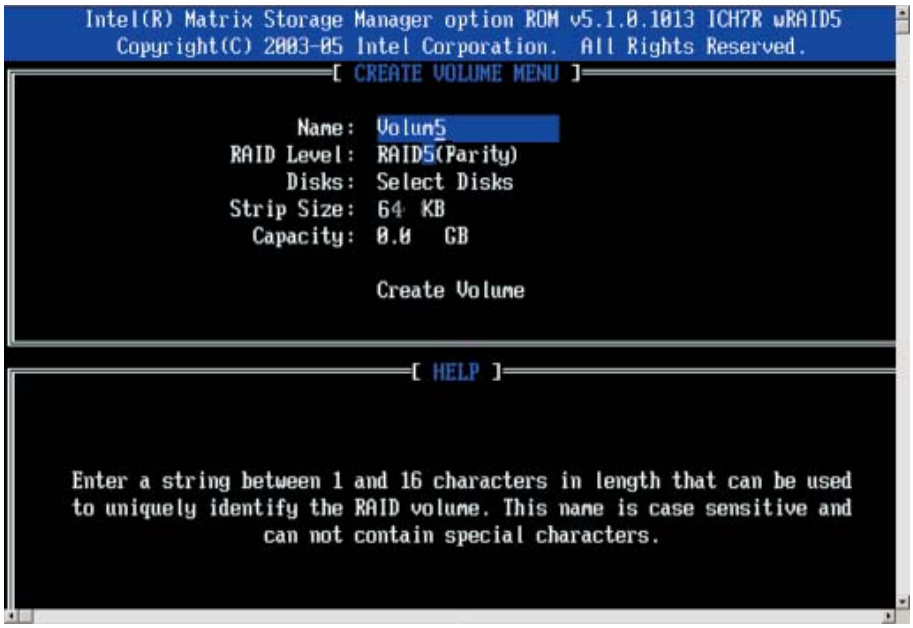

b. Specify a name for the RAID 5 set and press <Enter>.

c. When the Raid Level is highlighted, use the <Up Arrow>, <Down Arrow> keys to select RAID 5 (Parity) and hit <Enter>.

d. When the Disk item is highlighted, press <Enter> to select the HDD to configure as RAID. The following pop-up screen (*See the note on Page C-3) displays:

e. Use the <Up Arrow>, <Down Arrow> keys to highlight a drive and press <Space> to select it. A triangle appears to confirm the selection of the drive.

f. Use the <Up Arrow>, <Down Arrow> keys to select the stripe size, ranging from 4 KB to 128 KB for the RAID 5 array, and hit <Enter>. (***Note**: For a server, please use a lower stripe size, and for a multimedia system, use a higher stripe size. The default stripe size is 128 KB.)

g. Enter your desired RAID volume capacity and press <Enter> when the capacity item is highlighted. The default setting is the maximum capacity allowed.

h Press Enter when the Create Volume item is highlighted. A warning message displays.

i. When asked "Are you sure you want to create this volume (Y/N), press "Y" to create the RAID volume, or type "N" to go back to the Create Volume menu.

Deleting RAID Volume:

(**Warning**: Be sure to back up your data before deleting a RAID set. You will lose all data on the disk drives when deleting a RAID set.)

a. From the main menu, select item2-Delete RAID Volume, and press <Enter>.

b. Use the <Up Arrow>, <Down Arrow> keys to select the RAID set you want to delete and press <Del>. A Warning message displays.

c. When asked "Are you sure you want to delete this volume (Y/N), press "Y" to delete the RAID volume, or type "N" to go back to the Delete Volume menu.

Resetting to Non-RAID and Resetting a RAID HDD

(**Warning:** Be cautious when you reset a RAID volume HDD to non-RAID or Resetting a RAID HDD. Resetting a RAID volume HDD or Resetting a RAID HDD will reformat the HDD and delete all internal RAID configurations on the drive.)

a. From the main menu, select item3-Reset Disks to Non- RAID, and press <Enter>. The following screen will appear:

b. Use the <Up Arrow>, <Down Arrow> keys to highlight the RAID set drive to reset and press <Space> to select.

c. Press <Enter> to reset the RAID set drive. A Warning message displays.

d. Press "Y" to reset the drive, or type "N" to go back to the main menu.

Exiting the Intel Matrix Storage Manager Utility:

a. From the main menu, select item4-Exit, and press <Enter>. A warning message will appear.

b. Press "Y" to reset the drive, or type "N" to go back to the main menu.

C-2 Installing the Windows XP/2000/2003 for systems with RAID Functions

Installing a New Operating System-the Windows XP/2000/2003 OS

a. Insert Microsoft's Windows XP/2000/2003 Setup CD in the CD Driver, and the system will start booting up from CD.

b. Press the <F6> key when the message-" Press F6 if you need to install a third party SCSI or RAID driver" displays.

c. When the Windows XP/2000/2003 Setup screen appears, press "S" to specify additional device(s).

d. Insert the driver diskette-"Intel AA RAID XP/2000/2003 Driver for ICH7R into Drive A: and press the <Enter> key.

e. Choose the Intel(R)82801GR/GH *SATA RAID Controller* from the list indicated in the XP/2000/2003 Setup Screen, and press the <Enter> key.

f. Press the <Enter> key to continue the installation process. (If you need to specify any additional devices to be installed, do it at this time.) Once all devices are specified, press the <Enter> key to continue with the installation.

g. From the Windows XP/2000/2003 Setup screen, press the <Enter> key. The XP/2000/2003 Setup will automatically load all device files and then continue the Windows XP/2000/2003 installation.

h. After Windows XP/2000/2003 Installation is completed, the system will automatically reboot.

i. Insert Supermicro's CD that came with the package into the CD Drive during system reboot, and the Supermicro Main Screen will appear.

(***Note**: the current version of the ICH7R SATA RAID Utility can only support the Windows XP/2000/2003 Operating Systems.)

Appendix D
Adaptec HostRAID Setup Guidelines

After all the hardware has been installed, you must first configure the Adaptec Embedded Serial ATA RAID before you install the Windows operating system. The necessary drivers are all included on the Supermicro bootable CDs that came packaged with your motherboard. *Note: The following section provides information on the Adaptec SATA RAID Driver based on the Intel ICH7R South Bridge Controller.*

Introduction to the Intel ICH7R I/O Controller Hub

Located in the South Bridge of the Intel 3010 Chipset, the ICH7R I/O Controller Hub provides the I/O subsystem with access to the rest of the system. It supports 1-channel Ultra ATA/100 Bus Master IDE controller (PATA) and one Adaptec's Serial ATA (SATA) Host Controller, which support up to six Serial ATA drives, up to two RAID volumes and up to four drives in RAID Configurations. (See the table below for details.)

Raid Level	Create Via	When Appropriate
RAID 0	Quick Init	Creating a RAID 0 on new drives
RAID 0	Migrate*	Creating a RAID 0 from one new drive and one drive with data you wish to preserve
RAID 1	Build*	Any time you wish to create a RAID 1, but especially if you have data on one drive that you wish to preserve
RAID 1, RAID 10	Clear	Creating a RAID 1 or RAID 10 on new drives, or when you want to ensure that the array contains no data after creation.
RAID 1, RAID 10	Quick Init	Fastest way to create a RAID 1 or RAID 10 Appropriate when using new drives

To configure the Adaptec SATA RAID for Operating Systems that support RAID functions (--Windows, Red Hat & SuSe, Linux)

1. Press the <Del> key during system bootup to enter the BIOS Setup Utility.

Note: If this is the first time you power on the system, we recommend that you load the Optimized Default Settings. If you have already done so, please skip to Step 3.

2. Use the arrow keys to select the "Exit" Settings. Once in the "Exit" settings, Scroll down to select "Load Optimized Default Settings" and press the <Enter> key. Select "OK" to confirm the selection. Press <Enter> to load the BIOS default setting.

3. Use the arrow keys to select the "Main" section in BIOS.

4. Scroll down to "SATA Control Mode" and press <Enter> to select "Enhanced"

5. Scroll down to "SATA RAID Enabled" and press <Enter>. Then, select "Enabled."

6. Scroll down to "ICH RAID Codebase" and select "Adaptec". Then press <Enter>. (*For Adaptec ICH RAID configurations: Change the setting from Intel to Adaptec.)

7. Scroll down to "Exit". Select "Exit Saving Changes" from the "Exit" menu. Press the <Enter> key to save the changes and exit the BIOS.

8. Once you've exited the BIOS Utility, the system will reboot.

9. During the system bootup, press the <Ctrl> and <A> keys simultaneously to run the Intel RAID Configuration Utility when prompted by the following message: *Press <Ctrl> <A> for* Adaptec *RAID Configuration Utility*.

The Adaptec Embedded Serial ATA with HostRAID Controller Driver

The Adaptec Embedded Serial ATA RAID Controller adds SATA/RAID functionality and performance enhancements to a motherboard. RAID striping (RAID 0) allows data to be written across multiple drives, greatly improving hard disk I/O performance. RAID mirroring (RAID 1) allows data to be simultaneously written to two drives, improving data security even if a single hard disk fails. A Stripe of Mirrors (RAID 10) provides multiple RAID 1 mirrors and a RAID 0 stripe, maximizing data security and system efficiency. By incorporating the Adaptec Embedded Serial ATA into the motherboard design, Supermicro's PDSMU offers the user the benefits of SATARAID without the high costs associated with hardware RAID applications.

Using the Adaptec RAID Configuration Utility (ARC)

The Adaptec RAID Configuration Utility, an embedded BIOS Utility, includes the following:

*Array Configuration Utility: Use this utility to create, configure and manage arrays.

* Disk Utilities: Use this option to format or verify disks.

To run the Adaptec RAID Configuration Utility, you will need to do the following:

1. Enable RAID functions in the system BIOS (refer to Chapter 4 for System BIOS Configurations).

2. Press the <Ctrl> and <A> keys simultaneously when prompted during system boot. (Refer to the previous page for detailed instructions.)

A. Using the Array Configuration Utility (ACU)

When you press <Ctrl> and <A> keys simultaneously at the prompt during system bootup, the main menu will appear.

(*Note: To select an option, use the arrow keys to highlight the item and then press the <Enter> key to select it. To return to the previous menu, press the <ESC> key. Press the <Insert> key to select a drive. When a drive is highlighted (selected), press the <Delete> key to de-select it.)

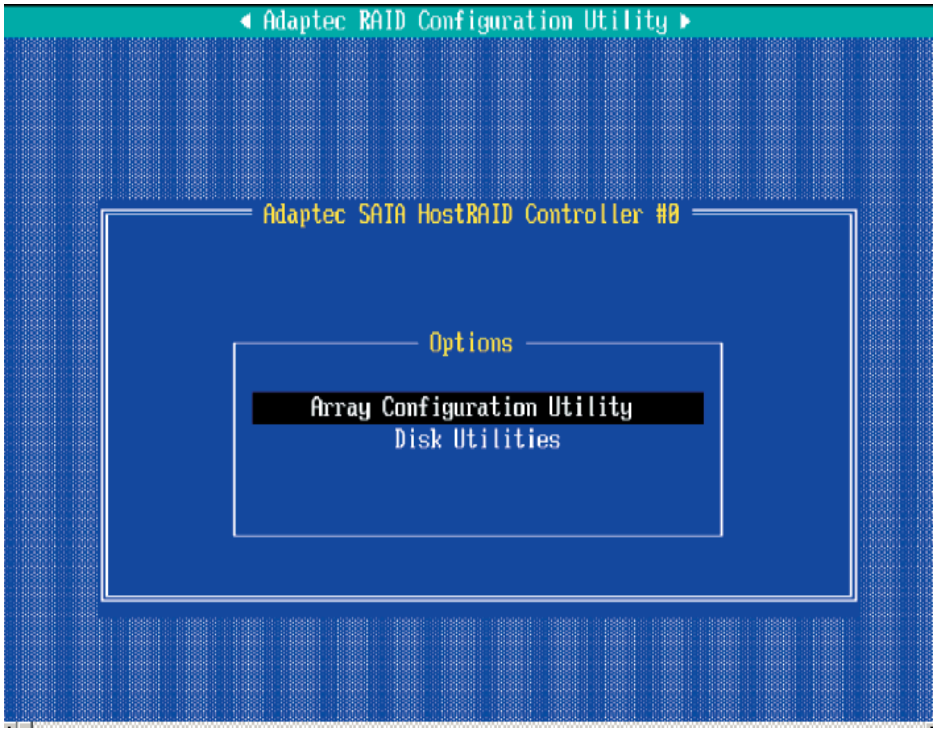

Managing Arrays

Select this option to view array properties, and configure array settings.

To select this option, using the arrow keys and the <enter> key, select "Managing Arrays" from the main menu as shown above.

Configuring Disk Drives

You may need to configure a disk drive before you can use it.

Caution: Configuring a disk may overwrite the partition table on the disk and may make any data on the disk inaccessible. If the drive is used in an array, you may not be able to use the array again.

Note: Do not configure a disk that is part of a boot array. To determine which disks are associated with a particular array, please refer to the section: *Viewing Array Properties.*

To configure a disk drive:

1. From the main menu (shown on Page D-4), select **Configure Drives** and hit <**Enter**> (as shown below.)

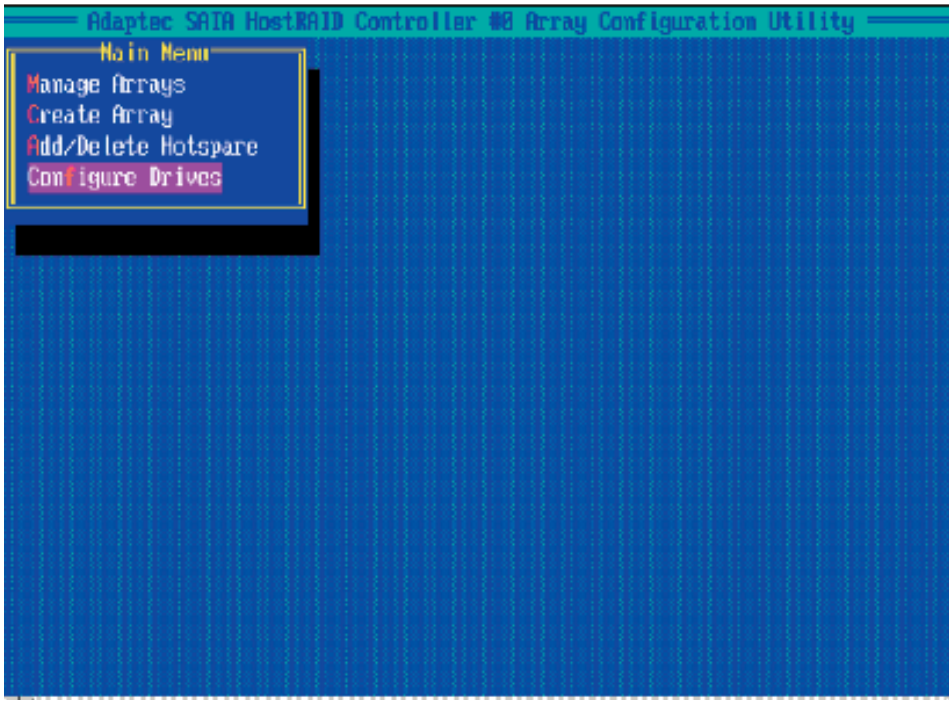

2. From the "Select Drives for Configuring" List (shown below,) select the drives you want to configure and press <**Insert**>.

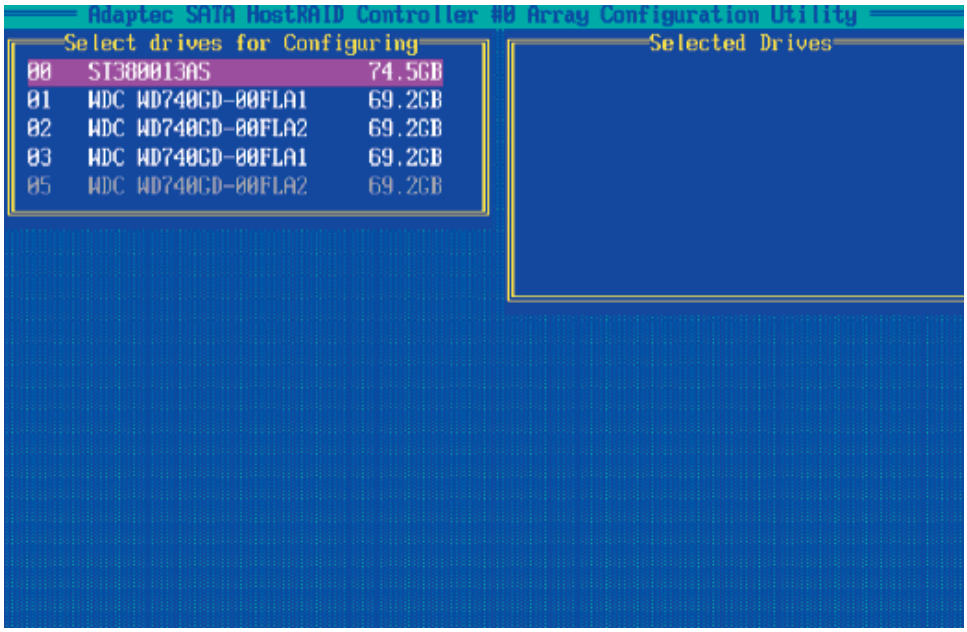

3. The drive you've selected will appear in the "Selected Drives Dialog Box" on the right (as shown below.) Repeat the same steps until all drives that you want to configure appear in the selected drives box.

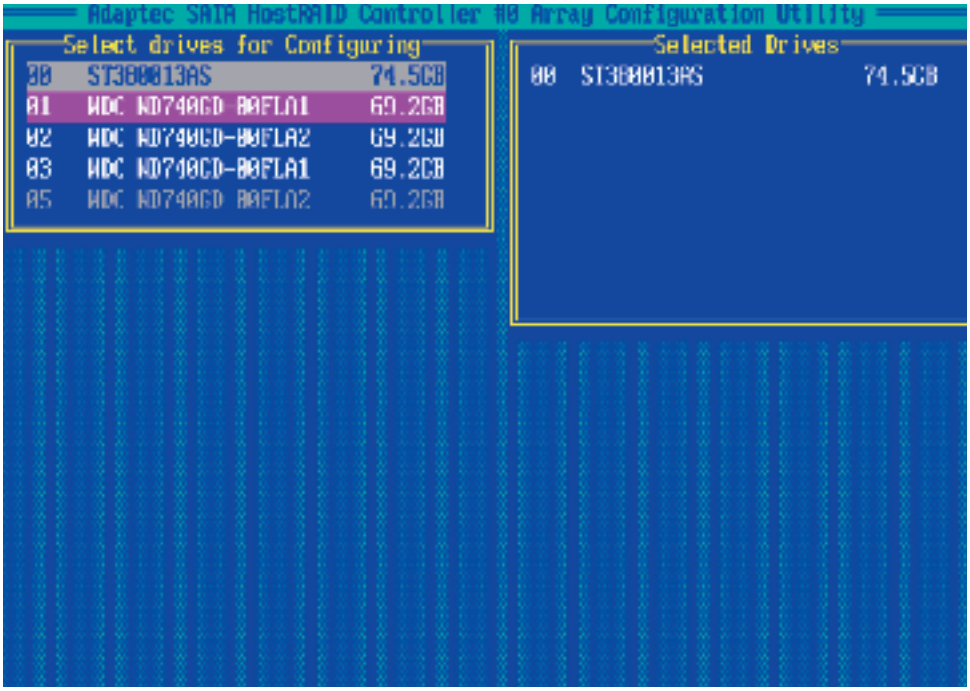

4. Once both drives display in the selected drive box, press <**Enter**.>

5. Read the warning message as shown in the screen below.

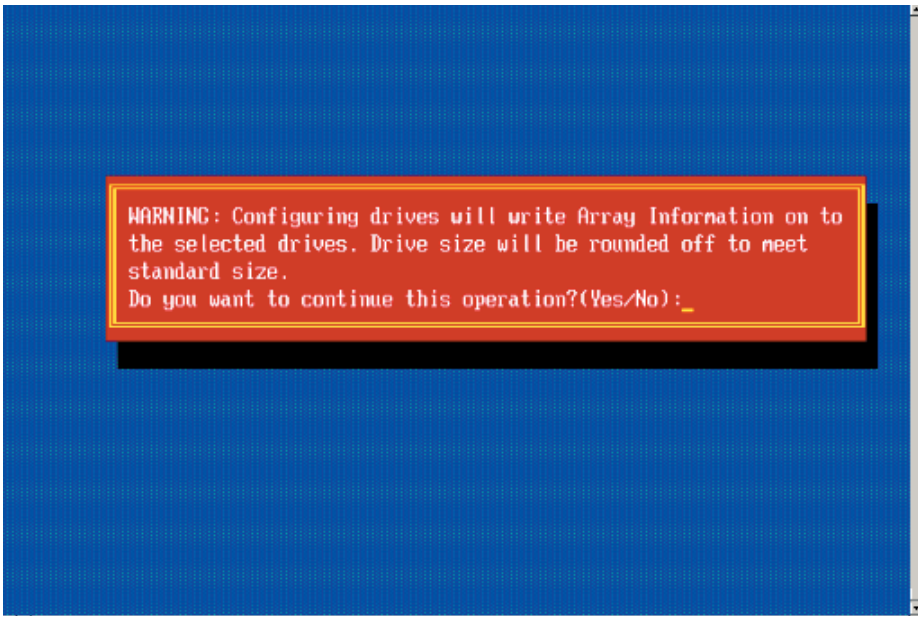

6. Make sure that you have selected the correct disk drives to configure. If correct, type **Y** to continue.

Creating Arrays

Before you create arrays, make sure that the disks for the array are connected and installed in your system. Note that disks with no usable space, or disks that are un-initialized or not formatted are shown in gray and cannot be used. (***Note**: It is recommended that you configure devices before you create arrays.)

To create an array:

1. From the main menu (shown on page D-4), select **Create Array**.

2. Select the disks for the new array and press Insert (as the screen shown below). **(*Note:** To de-select any disk, highlight the disk and press **Delete**.)

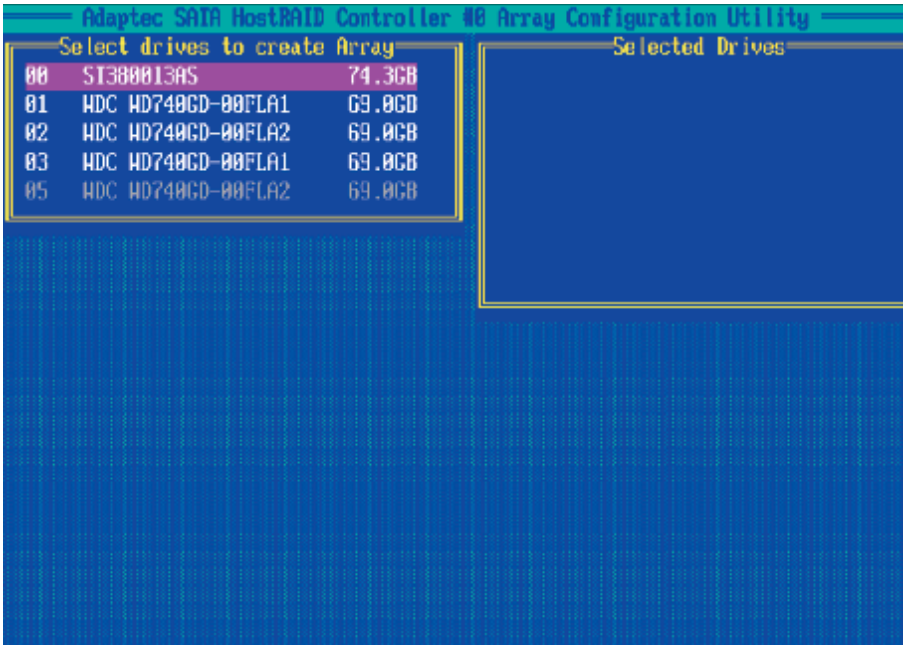

3. The arrays you have selected will appear on the Selected Drives dialog box on the right (as shown below.)

4 Press **Enter** when both disks for the new array are selected. The Array Properties menu displays.

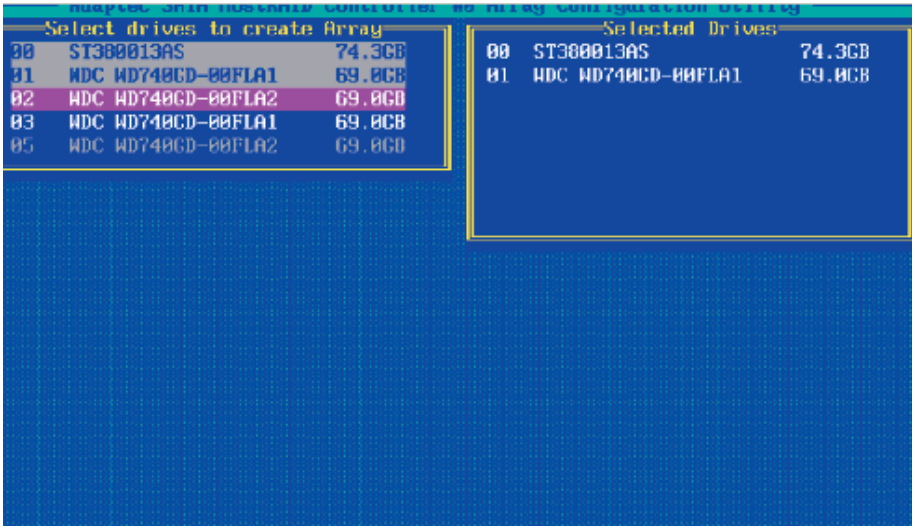

Assigning Array Properties

Once a new array is completed, you can assign properties to the array.

***Caution:** Once the array is created and its properties are assigned, and you cannot change the array properties using this utility.

To assign properties to the new array:

1. In the Array Properties menu (as shown in the screen below), select an array type and press **Enter**. Only the available array types will be displayed on the screen. (*RAID 0 or RAID 1 requires two drives.)

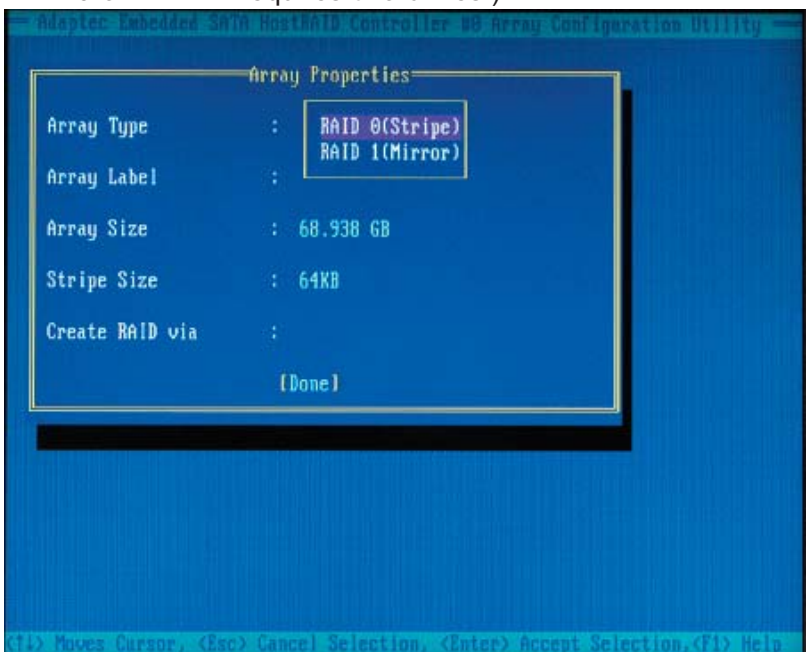

2. Under the item "**Arrays Label**", type in a label and press <**Enter**>. (***Note:** The label shall not be more than 15 characters.)

3. For RAID 0, select the desired stripe size. (*Note: Available stripe sizes are 16, 32, and 64 KB. 64K is default. Please *do not* change the default setting.)

4. The item: **"Create RAID via"** allows you to select between the different ways of creating methods for RAID 0 and RAID 1.

The following table gives examples of when each is appropriate.

Raid Level	Create Via	When Appropriate
RAID 0	Quick Init	Creating a RAID 0 on new drives
RAID 0	Migrate*	Creating a RAID 0 from one new drive and one drive with data you wish to preserve
RAID 1	Build*	Any time you wish to create a RAID 1, but especially if you have data on one drive that you wish to preserve
RAID 1, RAID 10	Clear	Creating a RAID 1 or RAID 10 on new drives, or when you want to ensure that the array contains no data after creation.
RAID 1, RAID 10	Quick Init	Fastest way to create a RAID 1 or RAID 10 Appropriate when using new drives

(***Note:** If you select Migrate for RAID 0, or Build for RAID 1, you will be asked to select the source drive. The contents of the source drive will be preserved. However, the data on the new drive will be lost.)

5. When you are finished, press **<Done>** (as the screen shown below).

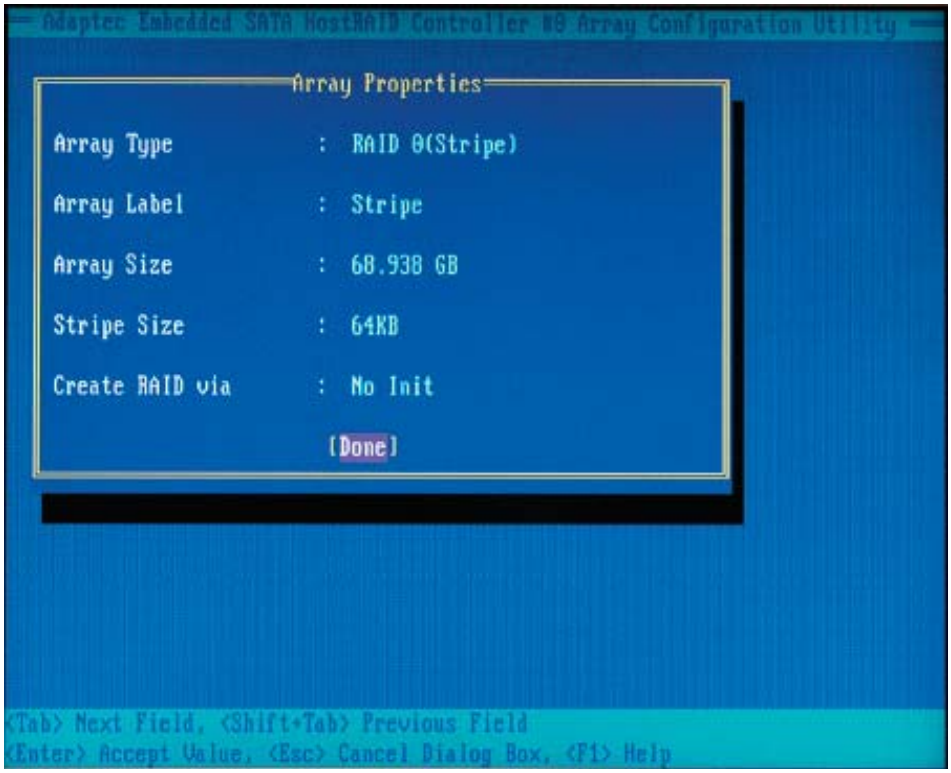

Notes:

1. Before adding a new drive to an array, be sure to back up any data stored on the new drive; otherwise, all data will be lost.

2. If you stop the Build or Clear process on a RAID 1, you can restart it by pressing <Ctrl> and <R>.

3. If you've used the Quick Init option to create a RAID1, it may return some data mis-comparison when you run a consistency check at a later time. This is normal.

4. The Adaptec Host RAID allows you to use drives of different sizes in a RAID. However, you can only select a smaller drive as the source or first drive during a build operation.

5. When migrating from single volume to RAID 0, migrating from a larger drive to a smaller drive is allowed. However, the destination drive must be at least half the capacity of the source drive.

6. It is not recommended that you migrate or build an array on Windows dynamic disks (volumes) because it will result in data loss.

Warning: Do not interrupt the process when you create a RAID 0 using the Migrate option. If you do, you will not be able to restart the system, or to recover the data that was on the source drive.

Adding a Bootable Array

To make an array bootable:

1. From the Main menu, select **Manage Arrays.**

2. From the List of Arrays, select the array you want to make bootable, and press <**Ctrl>** and **<B>.**

3. Enter Y to create a bootable array when the following message is displayed: "This will make all other existing bootable array non-bootable. Do you want to make this array bootable? (Yes/No):" Then, a bootable array will be created. An asterisk (*) will appear next to the bootable array (as shown in the picture below:)

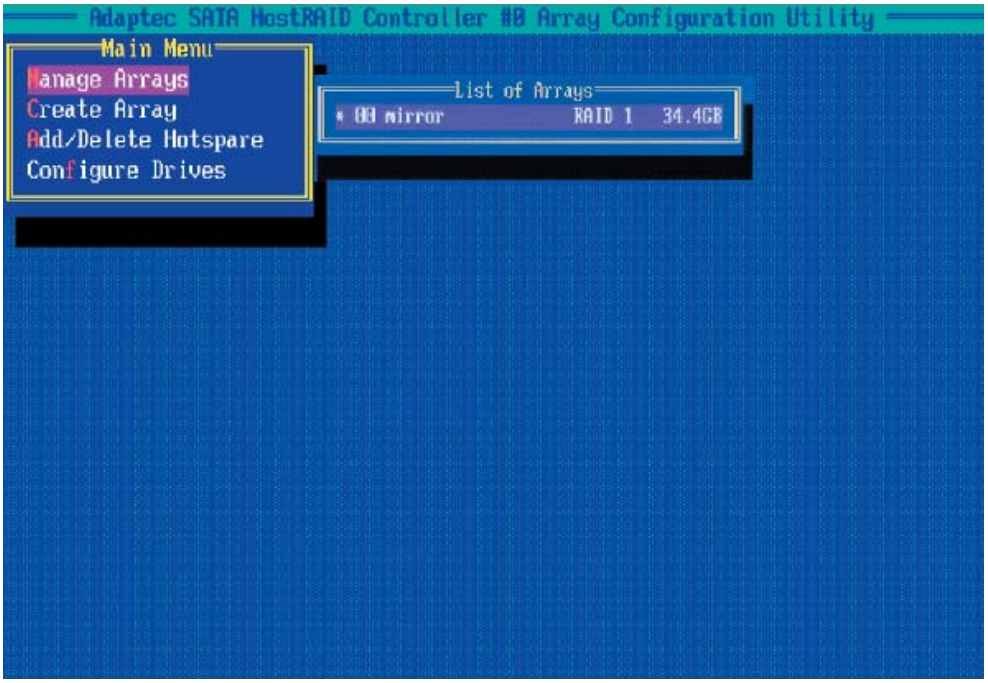

Deleting a Bootable Array

To delete a bootable array:

1. From the Main menu, select **Manage Arrays.**

2. From the List of Arrays, select the bootable array you want to delete, and press <**Ctrl>** and **<B>**. Note: a bootable array is the array marked with an asterisk * (as shown in the picture above.)

3. When the following message is displayed: "The array is already marked bootable. Do you want to make this array as not bootable? (Yes/No)," Enter Y to delete a bootable array. The bootable array will be deleted and the asterisk will disappear.

(*Note: Do not use the delete key to delete the bootable array.)

Adding/Deleting Hotspares

To add a Hotspare:

(*Note: In order to rebuild a RAID (RAID 0 or RAID 1), you would need to add a new HDD as a hotspare.)

1. From the main menu (shown on Page D-4), select Add/Delete Hotspares.

4. Use the up and down arrow keys to highlight and select the disk you want to designate as a hotspare, and press <Insert>, and then, press <**Enter**>.

5. Press **Yes** when the following prompt is displayed:

"Do you want to create spare?" (Yes/No?)

The spare you have selected will appear in the Selected drives Menu.

To delete a Hotspare:

1. From the main menu (shown on Page D-4), select Add/Delete Hotspares.

2. Use the up and down arrow keys to highlight and select the Hotspare you want to delete, and press <delete>, and then, press <Enter>.

3. When the following warning is displayed: "Do you want to delete the hot spare?" (Yes/No?), press **Yes** to delete the hotspare you have selected.

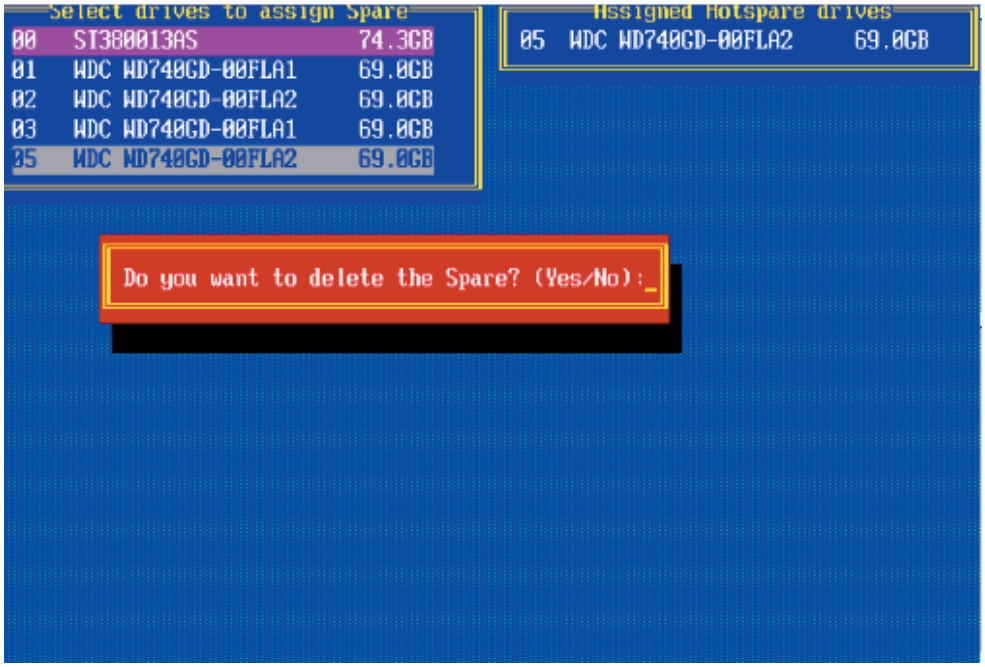

Viewing Array Properties

To view the properties of an existing array:

1. From the main menu, select **Manage Arrays** and hit <Enter> (as shown on the previous page.)

2. From the List of Arrays dialog box (shown below), select the array you want to view and press **Enter**.

The Array Properties dialog box appears (as shown below), showing detailed information on the array. The physical disks associated with the array are displayed here.

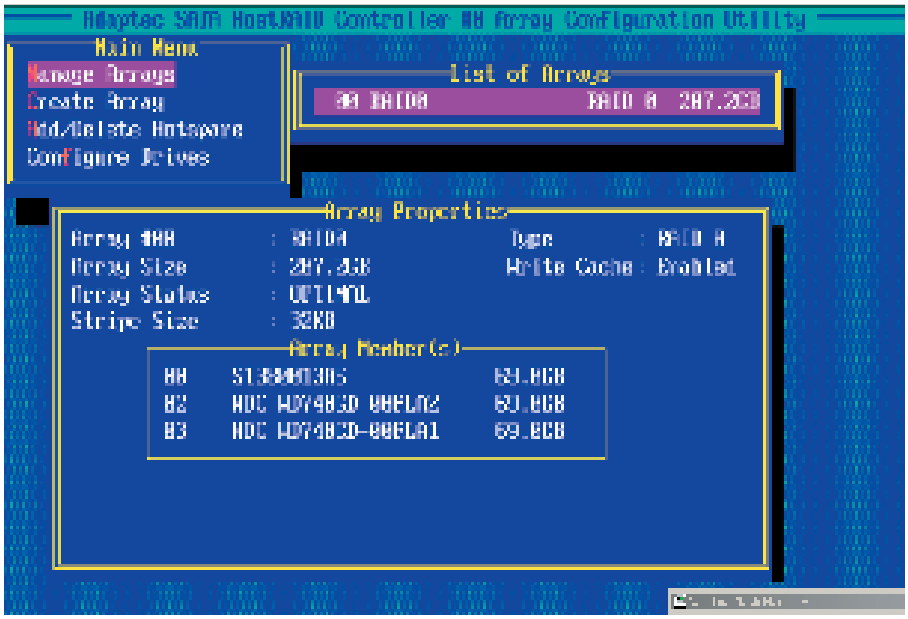

3. Press **Esc** to return to the previous menu.

Rebuilding Arrays

***Note 1:** Rebuilding applies to Fault Tolerant array (RAID 1) only.

If an array Build process is interrupted or when one critical member is missing, you must perform a Rebuild to restore its functionality. For a critical array rebuild operation, the optimal drive is the source drive.

***Note 2:** If no spare array exists and a hard disk drive fails, you need to create a spare before you can rebuild an array.

To Rebuild an array:

1 From the Main Menu, select **Manage Arrays** (as shown in the screen below). From the List of Arrays, select the array you want to Rebuild.

2 Press <**Ctrl**> and **<R>** to Rebuild.

Deleting Arrays

**Warning: Back up the data on an array before you delete it to prevent data loss Deleted arrays cannot be restored.*

To delete an existing array:

1. From the main menu (shown on Page D-4), select **Manage Arrays**.

2. Select the array you wish to delete and press <de**lete**>.

3. In the Array Properties dialog box, select **Delete** and press **<Enter>**. The following prompt is displayed:
**Warning!! Deleting the array will render array unusable. Do you want to delete the array? (Yes/No):*

***RAID 1 only*—the following prompt is also displayed:**

Deleting the partition will result in data loss! Do you also want to delete the partition? (Yes/No):

4. Press **Yes** to delete the array and partition or **No** to return to the previous menu.

5. Press **Esc** to return to the previous menu.

Using the Disk Utilities

The Disk Utilities enable you to format or verify the media of your Serial ATA hard disks.

To access the disk utilities:

1. From the Adaptec RAID Configuration Utility Menu, select **Disk Utilities** (as shown above) and press **<Enter>.** The following screen appears.

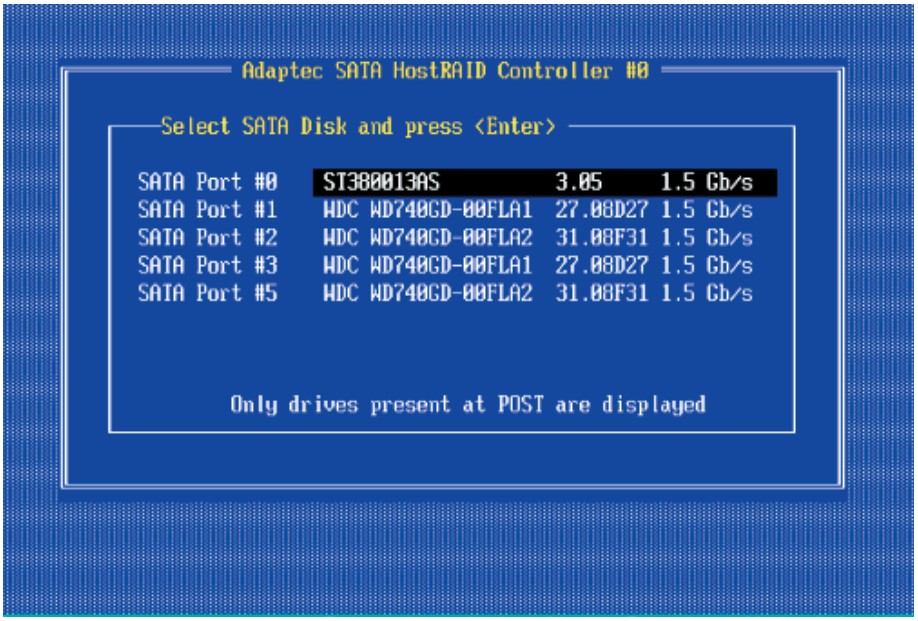

2. Select the desired disk and press **<Enter>**. The following screen appears:

To format a disk:

***Note:** The operation of **Formatting Disk** allows you to perform a low-level formatting of a hard drive by writing zeros to the entire disk. Serial ATA drives are low-level formatted at the factory and do not need to be low-level formatted again.

3 When the screen shown below displays, select **Format Disk** and press **<Enter>**. The following screen appears:

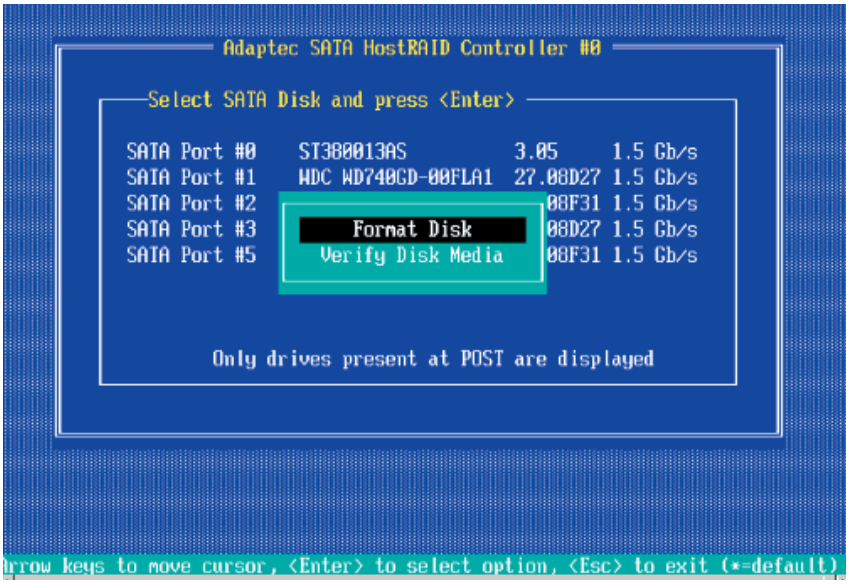

4 Read the warning message when it appears in the screen as shown below. To continue with disk formatting, select **Yes** and hit **<Enter>.** Otherwise, select **No** and press **<Enter>**.

(***Caution:** Formatting a disk destroys all data on the drive. Be sure to back up your data before formatting a disk.)

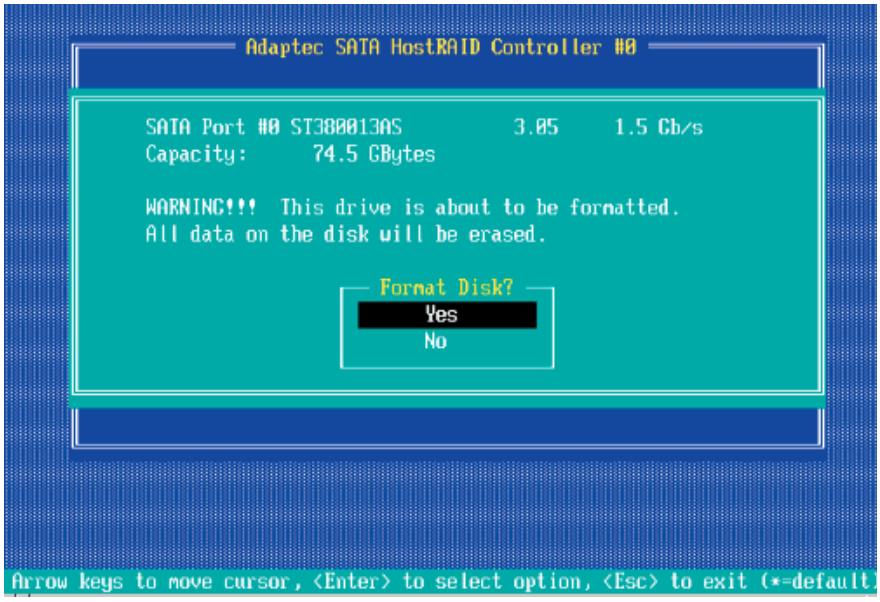

To verify disk media:

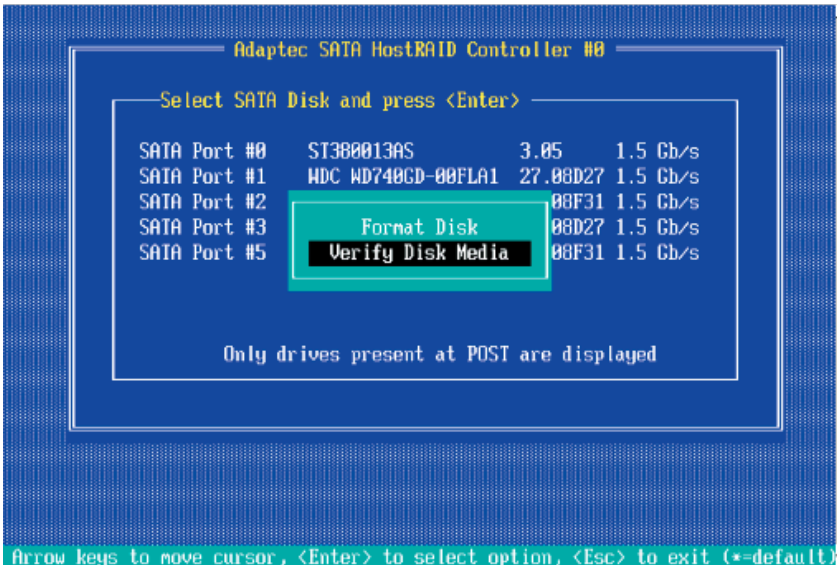

3 When the screen shown above displays, select **Verify Disk Media** and press **<Enter>**.

4 A message will display, indicating that the selected drive will be scanned for media defects. Select **Yes** and hit **<Enter>** to proceed with disk verifying; otherwise, select **No and** hit **<Enter>.**

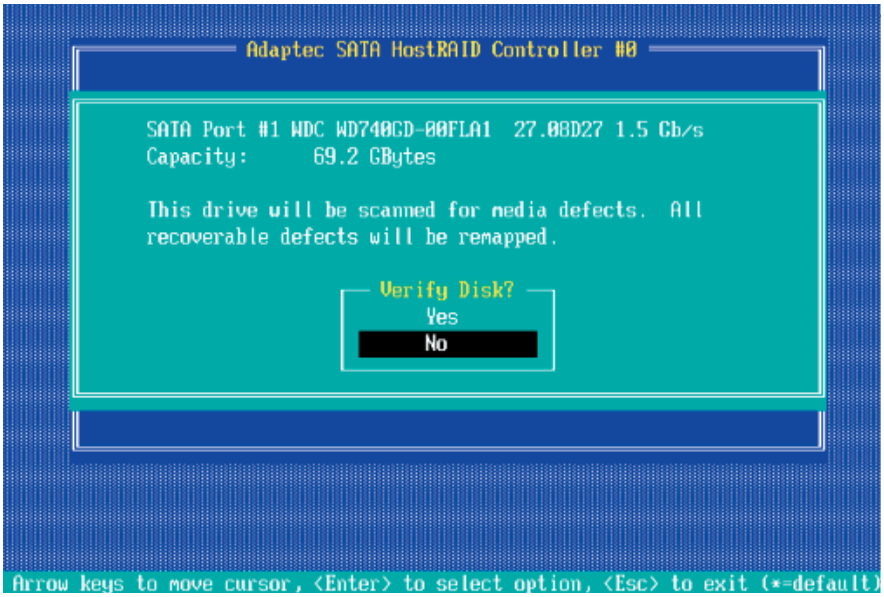

To Exit Adaptec RAID Configuration Utility

1. Once you have completed RAID array configurations, press **ESC** to exit. The following screen will appear.

2. Press **Yes** to exit the Utility.

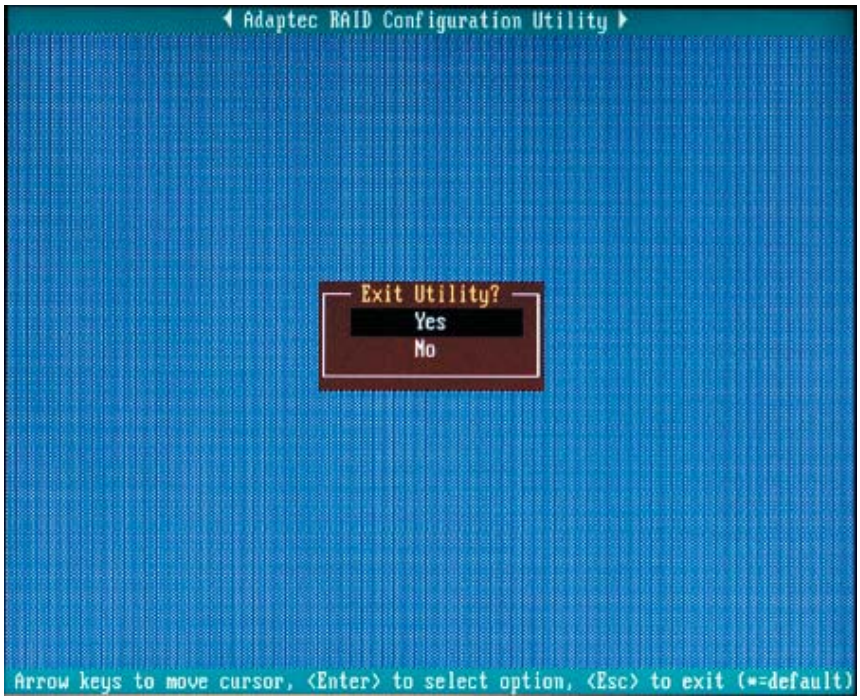

D-2 Installing Intel's ICH7R Driver by Adaptec and Installing the OS

a. Insert Supermicro's bootable CD that came with the package into the CD Drive during the system reboot, and the screen: "Super Micro Driver Diskette Maker" will appear.

b. Choose from the list the item: "Intel ICH7R Driver by 3rd Party (Adaptec)" and press <**ENTER**>.

c. From the next screen displayed, choose the OS driver you want to install and press <**Enter**>.

d. Insert a formatted diskette into drive A: and press <**Enter**> as prompted.

e. Exit the program after the process is completed. Then, reboot the system.

f. Insert the Microsoft Windows OS Setup CD in the CD Driver, and the system will start to boot up from CD.

g. Press the <**F6**> key when the message-"Press F6 if you need to install a third party SAS or RAID driver" displays.

h. When the Windows OS Setup screen appears, press "**S**" to specify additional device(s).

i. Insert the driver diskette-"Adaptec Embedded Serial ATA Raid Controller Driver" into Drive A: and press the <**Enter**> key.

j. Choose The Adaptec Embedded Host Serial ATA Raid Controller from the list indicated in the Windows OS Setup Screen, and press the <**Enter**> key.

k. Press the <**Enter**> key to continue the installation process. (If you need to specify any additional devices to be installed, do it at this time.) Once all devices are specified, press the <**Enter**> key to continue with the installation.

l. From the Windows OS Setup screen, press <**Enter**>. The OS Setup will automatically load all device files, and, then, continue with the Windows OS installation.

m. After Windows OS Installation is completed, the system will automatically reboot.

Appendix E
Installing Other Software Programs and Drivers

A. Installing Drivers other than the Adaptec Embedded Serial ATA RAID Controller Driver

After you've installed the Windows Operating System, a screen as shown below will appear. You are ready to install software programs and drivers that have not yet been installed. To install these software programs and drivers, click the icons to the right of these items.

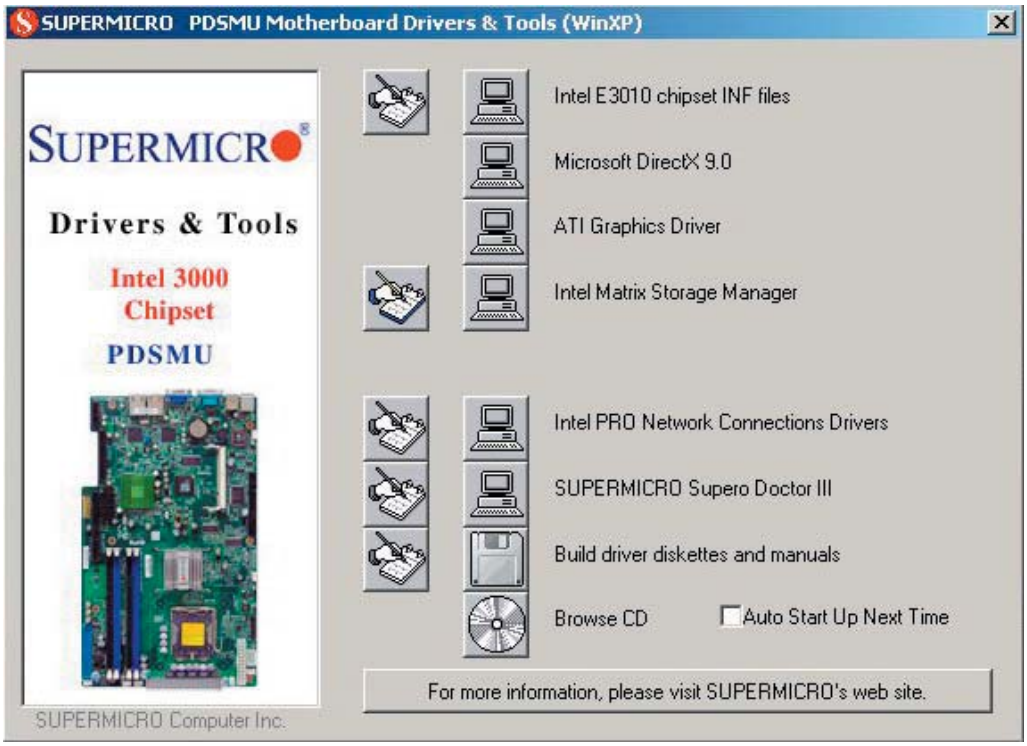

Driver/Tool Installation Display Screen

(***Note**: Click the icons showing a hand writing on the paper to view the readme files for each item. Click a computer icon to the right of an item to install an item one at a time (from top to the bottom). **After installing each item, you must re-boot the system before proceeding with the next item on the list.** The bottom icon with a CD on it allows you to view the entire contents of the CD.)

B. Configuring Supero Doctor III

The Supero Doctor III program is a Web-base management tool that supports remote management capability. It includes Remote and Local Management tools. The local management is called the SD III Client. The Supero Doctor III program included on the CDROM that came with your motherboard allows you to monitor the environment and operations of your system. Supero Doctor III displays crucial system information such as CPU temperature, system voltages and fan status. See the Figure below for a display of the Supero Doctor III interface.

***Note 1:** Both default user name and password are ADMIN.

***Note 2:** In the Windows OS environment, the Supero Doctor III settings take precedence over the BIOS settings. When first installed, Supero Doctor III adopts the temperature threshold settings previously set in the BIOS. Any subsequent changes to these thresholds must be made within Supero Doctor, since the SD III settings override the BIOS settings. For the Windows OS to adopt the BIOS temperature threshold settings, please change the SDIII settings to be the same as those set in the BIOS.

Supero Doctor III Interface Display Screen-I (Health Information)

Supero Doctor III Interface Display Screen-II (Remote Control)

(***Note**: SD III Software Revision 1.0 can be downloaded from our Web site at: ftp://ftp.supermicro.com/utility/Supero_Doctor_III/. You can also download SDIII User's Guide at: http://www.supermicro.com/PRODUCT/Manuals/SDIII/UserGuide.pdf. For Linux, we will still recommend that you use the Supero Doctor II Utility.)

Notes